City of Tracy
333 Civic Center Plaza
Tracy, CA 95376

DEVELOPMENT SERVICES

MAIN 209.831.6400
FAX 209.831.6439
www.ci.tracy.ca.us

February 24, 2015

Plan Holders of: **11th Street East Tracy Overhead Bridge Replacement Project**
CIP 73063

Subject: Addendum No. 1

Attached is Addendum No. 1 for the above referenced project.

If you have any questions regarding this addendum, please contact Zabih Zaca at zabih.zaca@ci.tracy.ca.us.

Sincerely,

Zabih Zaca
Senior Civil Engineer

Attachment

cc: Project File

****

ADDENDUM NO. 1

Date: February 24, 2015

Plan Holders of: **11th Street East Tracy Overhead Bridge Replacement Project**
CIP 73063

All prospective bidders are hereby notified that modification and/or changes are to be made to the specifications, plans and proposal documents for this project, as entitled above.

The following items indicate additions and/or deletions to the above referenced project's documents, and are hereby made a part thereof and are subject to all applicable requirements there under as if originally shown and/or specified. This addendum modifies the Bidding Documents and is hereby made part of the Contract Documents for this project to the extent as though it were originally included therein.

This addendum shall be acknowledged either by 1) acknowledging on the Signature of Bidder page of the Bid Proposal or 2) signing the last page of this addendum and submitting it with the bid. Any proposal not in compliance with this requirement may be rejected.

BIDDER INQUIRIES:

For bidder questions and answers, see Addendum Attachment A included with this addendum.

Responses to bidder inquiries, unless incorporated into formal addenda to the contract (i.e. listed as an "Item No." in the addenda), are not a part of the contract, and are provided for the bidder's convenience only. In some instances, the question and answer may represent a summary of the matters discussed rather than a word-for-word recitation. The availability or use of information provided in the responses to bidder inquiries is not to be construed in any way as a waiver of the provisions of 2-1.30 [2-1.03], "Job Site and Document Examination," of the Standard Specifications or any other provision of the contract, the plans, Standard Specifications, or special provisions nor to excuse the contractor from full compliance with those contract requirements. Bidders are cautioned that subsequent responses or contract addenda may affect or vary a response given previously.

PLANS, CONTRACT DOCUMENTS, AND SPECIAL PROVISIONS (BOOKS 1 AND 2):

The documents of this project are hereby changed as follows:

Item No. 1: PROJECT PLANS - Sheet 2 of 260, TYPICAL SECTIONS (Drawing X-1):

The following revision has been made to this sheet:

- Under Typical Structural Section #5, "GRIND" has been replaced with "COLD PLANE".

Item No. 2: **PROJECT PLANS –** Sheet 12 of 260, REMOVALS PLAN (Drawing RE-4); Sheet 46 of 260, DRAINAGE PLAN (Drawing D-4); Sheet 70 of 260, UTILITY RELOCATION STAGING PLAN (Drawing U-4); and Sheet 167 of 260, "RETAINING WALLS NO. 4, NO. 5, & NO. 6 FOUNDATION PLAN" (Drawing R-11):

The following revisions have been made to these sheets:

- Underground telephone line modified on Drawings RE-4, D-4, U-4 and R-11
- Overhead utility line has been revised from "OHE" to "OHE&T" on Drawing U-4

Item No. 3: **PROJECT PLANS –** Sheet 13 of 260, REMOVALS PLAN (Drawing RE-5); Sheet 19 of 260, LAYOUT (Drawing L-5); Sheet 47 of 260, DRAINAGE PLAN (Drawing D-5); Sheet 71 of 260, UTILITY RELOCATION STAGING PLAN (Drawing U-5); Sheet 79 of 260, STAGE 1 CONSTRUCTION-TRAFFIC HANDLING (Drawing SC-5); Sheet 85 of 260, STAGE 2 CONSTRUCTION-TRAFFIC HANDLING (Drawing SC-11); Sheet 91 of 260, STAGE 3 CONSTRUCTION-TRAFFIC HANDLING (Drawing SC-17); Sheet 98 of 260, STAGE 4 CONSTRUCTION-TRAFFIC HANDLING (Drawing SC-24); Sheet 105 of 260, STAGE 5 CONSTRUCTION-TRAFFIC HANDLING (Drawing SC-31); Sheet 112 of 260 STAGE 6 CONSTRUCTION-TRAFFIC HANDLING (Drawing SC-38); Sheet 124 of 260, DETOUR LAYOUT (Drawing DE-5); and Sheet 168 of 260, RETAINING WALLS NO.4, NO.5, & NO.6 FOUNDATION PLAN (Drawing R-12):

The following revisions have been made to these sheets:

- Recently placed irrigation pipe and standpipe added
- Added irrigation ditch by others and added callouts regarding existing irrigation standpipes capped below grade and protecting existing irrigation facilities in place to Drawing U-5

Item No. 4: **PROJECT PLANS -** Sheet 25 of 260, "B" LINE PROFILE (Drawing P-4):

The following revisions have been made to the profile sheet:

- Begin bike trail elevation has been revised from "ELEV 54.23" to "ELEV 54.85"
- Beginning profile grade has been revised from "2.00%" to "1.50%"
- Parameters for first vertical curve has been revised
- Tangent between first and second vertical curve has been revised from "-2.46%" to "-2.25%"
- Parameters for second vertical curve has been revised

Item No. 5: **PROJECT PLANS -** Sheet 35 of 260, CONSTRUCTION DETAILS (Drawing CD-7):

The following revision has been made to the sheet:

- "COLD PLANE AC PAVEMENT (2" MAX)" added to Wedge Grind Detail

Item No. 6: **PROJECT PLANS –** Sheet 39 of 260, CONSTRUCTION DETAILS (Drawing CD-11), and Sheet 41 of 260, CONSTRUCTION DETAILS (Drawing CD-13):

The following revisions have been made:

- Added 60" RCP Storm Drain Pipes to the "Wick Drain Layout" near Abutment 1 on Drawing CD-11
- Added 60" RCP Storm Drain Pipes to the "Wick Drain Layout Detail" and added wick omission/relocation notes for wicks in conflict with 60" RCP Storm Drain Pipes to Drawing CD-13

Item No. 7: **PROJECT PLANS –** Sheet 158 of 260, DESIGN NOTES (Drawing R-2):

The following revisions have been made to this sheet:

- Revised General Notes to state that corrosion designed from AASHTO backfill requirements and corresponding corrosion rates
- Revised corrosion rates shown for Soil Reinforcement under General Notes and added that all soil reinforcement, connections and bolts must be galvanized
- Added Material Types to General Notes

Item No. 8: **PROJECT PLANS –** Sheet 207 of 260, ENTRY MONUMENT AESTHETIC DETAILS NO. 2 (Drawing A-8):

The following revisions have been made to this sheet:

- Added "Conceptual Bronze Plaque Attachment Details" and corresponding Note 4

Item No. 9: **PROJECT PLANS –** Sheet 215 of 260, ABUTMENT 1 LAYOUT (Drawing S-7); Sheet 216 of 260, ABUTMENT 2 LAYOUT (Drawing S-8); Sheet 217 of 260, ABUTMENT LAYOUT DETAILS (Drawing S-9); and Sheet 222 of 260, ABUTMENT DETAILS NO 5 (Drawing S-14):

The following revisions have been made to these sheets:

- Note 5 on Drawings S-7 & S-8 and Note 1 on Drawings S-9 and S-14 have been changed from referencing "Aesthetic Details No. 2" sheet, to correctly reference "Aesthetic Details No. 3" sheet

Item No. 10: **PROJECT PLANS -** Sheet 221 of 260, ABUTMENT DETAILS NO. 4 (Drawing S-13):

The following revisions have been made to this sheet:

- Note 5 has been added
- Sections “J-J” & “K-K” scales have been increased and moved under the corresponding “Pipe Shear Key Detail”
- Sections “J-J”, “K-K”, “Pipe Shear Key Detail No. 1”, and “Pipe Shear Key Detail No. 2” have been expanded to include partial view of the abutment backwall, column, and abutment cap.
- In Section “K-K”, #7 ties and HSS 14 have been rotated to orient correctly to corresponding “Pipe Shear Key Detail No. 2”

Item No. 11: **PROJECT PLANS -** Sheet 229 of 260, GIRDER DETAILS NO. 3 (Drawing S-21), and Sheet 230 of 260, GIRDER DETAILS NO. 4 (Drawing S-22):

The following revisions have been made:

- Note 9 has been added to Drawing S-21
- Added a reference to Note 9 for #4 bar reinforcement, total 6 callout on Section F-F on Drawing S-21.
- Added #4 bar reinforcement, total 6 to the bottom flange of Section K-K (girder splice section) on Drawing S-22.

Item No. 12: **PROJECT PLANS –** Sheet 2 of 15, SUMMARY OF QUANTITIES (Drawing Q-2):

The following revisions have been made to this sheet:

- A row has been added in the Pavement Structures Quantities table for the 2” overlay/variable depth overlay transition cold plane asphalt concrete pavement quantity.
- End station of variable depth overlay has been revised from ”A” 40+64.42 to “A” 41+64.42 in Pavement Structures Quantities table.
- “14689” quantity for cold plane asphalt concrete pavement has been added to the Pavement Structures Quantities table.
- Total for cold plane asphalt concrete pavement quantity has been revised from “17462” to “35969”.

Item No. 13: **PROJECT PLANS –** Sheet 15 of 15, SUMMARY OF QUANTITIES (Drawing Q-15):

The following revision has been made to this sheet:

- Roadside sign sizes added.

Item No. 14: **INFORMATION HANDOUT – ITEM A,** Construction Cross Sections:

These following revisions have been made to the construction cross sections (note that these cross sections that were previously uploaded to the City website on February 12, 2015 are formally added as part of this addendum):

- Revised cross sections for 11th Street, North MacArthur Drive, and the bike trail are provided at a scale of 1" = 10'
- Cross sections for the temporary detour at a scale of 1" = 10' have been added

Item No. 15: INFORMATION HANDOUT, ITEM A – Construction Cross Sections, Sheet 6 of 68, 11th STREET CROSS SECTIONS (Drawing CS-6):

The following revisions have been made to the sheet:

- Slope callout has been revised from "1.0%" to "0.5%"
- Slope callout has been revised from "5.1%" to "3.6%"
- Station elevation callout has been revised from "EL=53.54" to "EL=53.27"

Item No. 16: INFORMATION HANDOUT, ITEM A – Construction Cross Sections, Sheet 7 of 68, 11th STREET CROSS SECTIONS (Drawing CS-7):

The following revision has been made to the sheet:

- Station elevation callout has been removed

Item No. 17: INFORMATION HANDOUT – ITEM H, Utility Potholing Information:

Utility potholing information is a new information handout item that has been added (note that this information was previously uploaded to the City website on February 12, 2015 and is formally added as part of this addendum):

Item No. 18: BID BOOK (BOOK 1 OF 3), Pages P-5 through P-18, Bid Schedule
The BID SCHEDULE is replaced in its entirety with the BID SCHEDULE pages in this Addendum. The following changes have been made to the bid schedule:

a) Item No. 1A, Partnering, a new bid item for Partnering was added.

b) Item No. 4, Ballast Tamping, a set dollar amount was added for ballast tamping.

c) Item No. 64, Cold Plane Asphalt Concrete Pavement (0.17' Maximum), the quantity has been revised.

Item No. 19: BID BOOK (Book 1 of 3), Page P-22, Non-Collusion Affidavit:

Replace Page P-22 with Page P-22 included with this Addendum, to be submitted with the Bid Proposal

Item No. 20: BID BOOK (Book 1 of 3), Page P-31, City Of Tracy Procedure for Debarment and Suspension Certification:

Replace the 2nd bullet in the 1st paragraph of the City of Tracy Procedure for Debarment and Suspension Certification form with:

- "Contractor must provide and include in their bid package DUNS numbers for prime and all subs. If the DUNS number for the subs are not readily available, the subs DUNS numbers must be provided within 5 business days of bid opening."

Item No. 21: BID BOOK (Book 2 of 3), Page SP-3, SPECIAL NOTICES:

Add to the bulleted list in the SPECIAL NOTICES:

- "Night work, weekend work, and/or extended shifts will be required to comply with UPRR requirements and to complete the project work within the specified number of working days.

- Attention is directed to section 9-1.03 of the Standard Specifications: "Full compensation for work specified in divisions I, II, and X is included in the payment for the bid items unless:
    1. Bid item for the work is shown on the Bid Item List
    2. Work is specified as change order work"

Item No. 22: BID BOOK (Book 2 of 3), Page SP-9, Bid Item List:

Revise the Bid Item List:

- Add Item "1A", Bid Item Number "050001", "Partnering", Unit of Measure "LS", Estimated Quantity "1"
- Revise Estimated Quantity for Item No. 64, Cold Plane Asphalt Concrete Pavement (0.17' Maximum) to "36,000" SQFT

Item No. 23: BID BOOK (Book 2 of 3), Page SP-20 Utility Potholing Supplemental Information:

Add to the list in section 2-1.06B:

"E. Utility potholing information"

Item No. 24: BID BOOK (Book 2 of 3), Page SP-21, Partnering:

Replace Section 5-1.09D with:

"5-1.09D Payment

The City pays you for:

1. Partnering workshops and sessions based on facilitator and workshop site cost
2. Monthly partnering evaluation survey service cost
3. Partnering skills development trainer and training site cost

$70,000 total has been set aside for Partnering for your and the City costs. The City pays you ½ of the total Partnering costs up to a maximum of $35,000. You are responsible for paying the full partnering costs and must submit invoices to the City for reimbursement for ½ of the total costs.

The City does not pay markups on these costs.
The City does not pay for wages, travel expenses, or other costs associated with the partnering workshops and sessions, monthly partnering evaluation surveys, and training in partnering skills development."

Item No. 25: BID BOOK (Book 2 of 3), Page SP-22 and 23, UPRR Flagging and Night Work:

Replace the 9th paragraph of Section 5-1.20C with:

"The Contractor will give the advance notice to the Railroad that is required in the Contractor's Right of Entry Agreement before commencing any work on Railroad property. The cost of Railroad required flagging, as defined in Exhibit C of the Crossing Agreement, is estimated at $1,300 per 8 hour day and $1,800 per 8 hours for nights and weekends. For bidding purposes, you must assume a flagman will be required for 250 days for a total cost not to exceed $325,000. The flagging cost due to your work must be borne entirely by you for up to $325,000. Payment to you shall be based on monthly UPRR invoices submitted. No markups or surcharge shall apply to the cost of UPRR flagging. For all flagging work exceeding $325,000, the cost will be borne equally between you and the City with a Contract Change Order."

Replace the last paragraph of Section 5-1.20C with:

"Night Work
UPRR may allow an 8 to 10 hour work window at nights and on weekends at their discretion. All required work within 25 feet and over the UPRR tracks must be limited to night and weekend work, unless otherwise approved by UPRR. Required work includes but is not limited to the following: bridge demolition, CIDH installation, splice tower erection and removal, PC girder erection, splice tower erection and removal, temporary steel truss bridge erection and removal, superstructure formwork installation and removal, reinforcement installation, concrete placement, bridge concrete finishing, barrier rail installation, fence installation, luminaires and lights installation."

Item No. 26: BID BOOK (Book 2 of 3), Page SP-29, Utility Work:

Replace the 2nd paragraph of Section 5-1.36D with:

"Before starting work that could damage or interfere with the existing Sprint fiber optic line, submit plan for protecting line in place. You may not begin any work that may

damage the existing line until the protection plan submittal is authorized by the Engineer and implemented by you. Payment for preparing and implementing the plan is included in the various items of work."

Item No. 27: BID BOOK (Book 2 of 3), Page SP-36, Retention:

Replace Section 9-1.16 F with:

"The department retains 5% from progress payments. This retention will be released after contract acceptance."

Item No. 28: BID BOOK (Book 2 of 3), Page SP-37, Furnish Field Office:

There is a revised standard specification using section 10-4. Change the Section number (and corresponding headings) from "10-4" to "10-3".

Item No. 29: BID BOOK (Book 2 of 3), Page SP-51, Noise Control:

Replace the 1st sentence of the 2nd paragraph of Section 14-8.02A with:

"Do not exceed 86 dBA LMax at 50 feet from the job site activities from 9 p.m. to 7 a.m. For night work activities involving bridge demolition and other noise that, in the Engineers opinion, cannot reasonably be accomplished without exceeding 86dBa LMax at 50 feet from the activity, do not exceed 86dBA at the nearest residence. Prior to demolition or noise generating activity that will exceed the specified noise levels at 50 feet, you must notify residents adjacent to the project site with notices delivered to the residence within 2 working days of beginning such activities."

Item No. 30: BID BOOK (Book 2 of 3), Page SP-55, Material Containing Hazardous Waste Concentrations of ADL:

Add to Section 14-11.03C(6):

"The Engineer will obtain the State of California Board of Equalization Identification Number, for hazardous waste disposal. The Engineer will sign all hazardous waste manifests. Notify the Engineer 5 business days before the manifests are to be signed.

You are responsible for any costs associated with treating or amending the Z-2 Soils, if required by the Class I disposal facility.

You are responsible for any Board of Equalization costs."

Item No. 31: BID BOOK (Book 2 of 3), Page SP-76, Wick Drains:

Replace the entire Section in the Special Provisions titled "**Add to section 19-6.03D:** with:

"Add to section 19-6.03D:

Settlement periods and surcharges are required for bridge approach embankments as shown in the following table:

Bridge name or number	Abutment number	Location	Wall/ Embankment Height	Surcharge height (feet)	Settlement period with wick drain installation (days)	Wick Drain Spacing (triangular pattern)	Wick Drain Tip Elev
29C-0465 (New br. no.)	1	< 150' from Abut (Area 2 on Plan Sheet CD-11)	Up to 42 ft	0.0	30	4-foot	10
29C-0465 (New br. no.)	1	> 150' from Abut (Area 1 on Plan Sheet CD-11)	≥ 25 ft	0.0	90	8-foot	20
29C-0465 (New br. no.)	1	> 150' from Abutment	< 25 ft	0.0	90	No Wick Drains Required	
29C-0465 (New br. no.)	2	< 150' from Abut (Area 3 on Plan Sheet CD-11)	Up to 42 ft	0.0	30	4-foot	10
29C-0465 (New br. no.)	2	> 150' from Abut (Area 4 on Plan Sheet CD-11)	≥ 25 ft	0.0	90	8-foot	20
29C-0465 (New br. no.)	2	> 150' from Abutment	< 25 ft	0.0	90	No Wick Drains Required	
Temporary Bridge	1	Area 5 on Plan Sheet CD-12	≥ 25 ft	0.0	30	6-foot	20
Temporary Bridge	1	Rest of Detour Approach	< 25 ft	0.0	30	No Wick Drains Required	
Temporary Bridge	2	Area 6 on Plan Sheet CD-12	≥ 25 ft	0.0	30	6-foot	20
Temporary Bridge	2	Rest of Detour Approach	< 25 ft	0.0	30	No Wick Drains Required	

The contractor must install the wick drains."

Item No. 32: BID BOOK (Book 2 of 3), Page SP-76, Settlement Periods and Surcharges:

Add numbers 3 and 4 to the 1st paragraph of Section 19-6.03D:

"3. Entire width of fill between parallel portions of Retaining Wall No. 1.
4. Entire width of fill between parallel portions of Retaining Wall No. 5."

Item No. 33: BID BOOK (Book 2 of 3), Page SP-98, Hydroseed:

Add to Section 21-1.03E:

"For Hydroseed, use the following seed mixture (Pacific Coast Seed or other manufacturer):

HABITAT MIX "Bay Area"
#Ac. Species/Common Name -40 Total Lbs.
10 Bramus carinatus / Native California Brame
8 Elymus glaucus / Blue Wildrye
8 Hordeum californicum / California Barley
5 Festuca idahoensis / Idaho Fescue
5 Nassella pulchra / Purple Needlegrass
4 Poa secunda/Native Pine Grass"

Item No. 34: BID BOOK (Book 2 of 3), Page SP-101, Earth Retaining Systems:

Replace the 2nd paragraph of Section 47-1.01 with:

"Placement of the top panel of the earth retaining systems must be constructed in accordance with Section 47-2.03B(1) to allow the specified settlement to occur prior to fabricating and placing the top panel."

Item No. 35: BID BOOK (Book 2 of 3), Page SP-102, Earth Retaining Systems, Structure Backfill and Soil Reinforcement:

Replace the 2nd table in the 2nd paragraph of section 47-2.02C with:

Property Requirements

Test	Requirement	California Test
Sand equivalent	12 minimum	217
Plasticity index	6 maximum	204
Minimum resistivity	≥3000 ohm-cm	643
Chlorides	≤ 100 ppm	422
Sulfates	≤ 200 ppm	417
pH	5.0 to 10.0	643
Organic Content	≤ 1%	

NOTE : If 12 percent or less passes the no. 200 sieve and 50 percent or less passes the no. 4 sieve, the Sand Equivalent and Plasticity Index requirements do not apply.

Replace Section 47-2.02E with:

"47-2.02E Soil Reinforcement

Steel wire must comply with the specifications for plain wire reinforcement in ASTM A1064/A1064M. Welded wire reinforcement must comply with the specifications for plain wire welded wire reinforcement in ASTM A1064/A1064M.

Hooks and bends must comply with the Building Code Requirements for Structural Concrete published by ACI.

Ribbed Reinforcing Strips must comply ASTM A-572, Grade 65 (AASHTO M-223) Galvanizing must comply with the requirements of ASTM A123 (AASHTO M-111). The minimum galvanizing coating thickness must be 2 ounces/square feet.

Tie Strips must comply with ASTM A-1011, Grade 50. Galvanizing must comply with ASTM A-123 (AASHTO M-111) or ASTM A-153 (AASHTO M-232). The minimum galvanizing coating thickness must be 2 ounces/square feet.

Wire Tie Strips and Loop Inserts must comply with ASTM A-82. Galvanizing must comply with ASTM A-123 (AASHTO M-111). The minimum galvanizing coating thickness must be 2 ounces/square feet.

Fasteners for Tie Strips must be Hexagonal cap screw bolts and nuts. Cap screws must comply with ASTM A-449 (AASHTO M-164) or equivalent. Galvanizing for cap screws must comply with ASTM A-153 (AASHTO M-232).

Sacrificial thickness is computed for each exposed surface based on backfill meeting AASHTO requirements for nonaggressive soil and following corrosion rates:

- Loss of galvanizing = 0.58 mil/yr for first 2 years

  = 0.16 mil/yr for subsequent years till galvanizing is depleted
- Loss of carbon steel = 0.47 mil/yr after zinc depletion"

Item No. 36: <u>BID BOOK (Book 2 of 3),</u> <u>Page SP-104, Materials:</u>

Replace Reserved in Section 47-6.02 with:

"You may use structure backfill that meets the requirements of Table 1.

Table 1 Property Requirements

Test	Requirement	California Test
Sand equivalent	12 minimum	217
Plasticity index	6 maximum	204
Minimum resistivity	≥3000 ohm-cm	643
Chlorides	≤ 100 ppm	422
Sulfates	≤ 200 ppm	417
pH	5.0 to 10.0	643
Organic Content	≤ 1%	

NOTE : If 12 percent or less passes the no. 200 sieve and 50 percent or less passes the no. 4 sieve, the Sand Equivalent and Plasticity Index requirements do not apply.

If structure backfill meeting the requirements of Table 1 is used, you must calculate the sacrificial thickness for each exposed surface as follows:

- Loss of galvanizing = 0.58 mil/yr for first 2 years

  = 0.16 mil/yr for subsequent years till galvanizing is depleted

- Loss of carbon steel = 0.47 mil/yr after zinc depletion

You may use structure backfill that meets the requirements of Table 2:

Table 2 Property Requirements

Test	Requirement	California Test
Sand equivalent	12 minimum	217
Plasticity index	6 maximum	204
Minimum resistivity	2000 ohm-cm	643
Chlorides	≤ 250 ppm	422
Sulfates	≤ 500 ppm	417
pH	5.0 to 10.0	643
Organic Content	≤ 1%	

NOTE : If 12 percent or less passes the no. 200 sieve and 50 percent or less passes the no. 4 sieve, the Sand Equivalent and Plasticity Index requirements do not apply.

At a minimum, the structure backfill must meet the requirements of Table 2. For structure backfill meeting the requirements in Table 2 above but less than the requirements listed in Table 1 above, you must calculate the sacrificial thickness of each exposed surface as follows:

- Loss of galvanizing = Takes 10 years.
- Loss of carbon steel = 1.1 mil/yr after zinc depletion"

Item No. 37: BID BOOK (Book 2 of 3), Page SP-143, Pedestrian and Protective Railing (Detour):

Add to Section 83-1.02H:

"You are responsible for the design for the Pedestrian Railing (Detour)."

Add to Section 83-1.02K:

"You are responsible for the design for the Protective Railing (Detour)."

Item No. 38: BID BOOK (Book 2 of 3), Appendix A, Federal Wage Rates

The Prevailing Wages have been updated as of 02/20/2015. See the Federal Web site, http://www.dot.ca.gov/hq/esc/oe/federal-wages/ca09.pdf for current rates.

Attachments:

- Revised Bid Schedule
- Page P-22 Replacement
- Revised Project Plans and Cross Sections

All other items remain unchanged.

Kul Sharma, Interim City Engineer

Addendum No. 1 is hereby acknowledged by the bidder's signature.

Name of Bidder's Company	Authorized Signature
Date	Title

END OF ADDENDUM NO. 1

****

Revised per Addendum 1

BID SCHEDULE

11TH STREET EAST TRACY OVERHEAD BRIDGE REPLACEMENT PROJECT
(N. MacArthur Drive to Cabe Road)
CIP No. 73063
Federal Project No. BHLS-5192(020)

All applicable sales taxes, state and/or federal, and any other special taxes, patent rights or royalties are included in the price quoted in the bid.

In the case of a discrepancy between the product of the "Estimated Quantity" and the "Unit Price" with the "Item Total", the product of the "Estimated Quantity" and the "Unit Price" shall prevail and the figure shown as the "Item Total" shall be adjusted accordingly. In the case of a discrepancy between the sum of the figures in the "Item Total" column (adjusted per the previous sentence, if necessary) and the amount set forth as the "Total Base Bid Amount", the sum of the figures in the "Item Total" column shall prevail and the amount shown as the "Total Base Bid Amount" shall be adjusted accordingly.

(F) shall designate Final Pay Items. (P) or (P-F) are items eligible for payment as materials on hand.

BASE BID ITEMS ARE AS FOLLOWS:

No.	P/F	Bid Item No.	Bid Item Description	Unit of Measure	Estimated Quantity	Unit Price	Amount
1		999990	MOBILIZATION	LS	1		
1A		**050001**	**PARTNERING**	**LS**	**1**	**$35,000**	**$35,000**
2		051000	RAILROAD FLAGGING	DAYS	250	$1,300	$325,000
3		052000	TRACK SETTLEMENT MONITORING	LS	1		
4		053000	BALLAST TAMPING	EA	2	**$10,000**	**$20,000**
5		066013	CONSTRUCTION STAKING	LS	1		
6		066018	FURNISH FIELD OFFICE	LS	1		
7		070030	LEAD COMPLIANCE PLAN	LS	1		

No.	P/F	Bid Item No.	Bid Item Description	Unit of Measure	Estimated Quantity	Unit Price	Amount
8		080050	PROGRESS SCHEDULE (CRITICAL PATH METHOD)	LS	1		
9		120000	PROJECT FUNDING SIGN	EA	2		
10		120090	CONSTRUCTION AREA SIGNS	LS	1		
11		120100	TRAFFIC CONTROL SYSTEM	LS	1		
12		120110	FLASHING ARROW SIGN	EA	2		
13		120120	TYPE III BARRICADE	EA	26		
14		120149	TEMPORARY PAVEMENT MARKING (PAINT)	SQFT	1540		
15		120159	TEMPORARY TRAFFIC STRIPE (PAINT)	LF	17100		
16		120165	CHANNELIZER (SURFACE MOUNTED)	EA	450		
17		128651	PORTABLE CHANGEABLE MESSAGE SIGN	EA	5		
18		129000	TEMPORARY RAILING (TYPE K)	LF	5800		
19		12XXXX	TEMPORARY ACCESS ROAD	LS	1		
20		129110	TEMPORARY CRASH CUSHION	EA	10		
21		130100	JOB SITE MANAGEMENT	LS	1		
22		130300	PREPARE STORM WATER POLLUTION PREVENTION PLAN	LS	1		
23		130330	STORM WATER ANNUAL REPORT	EA	3		

No.	P/F	Bid Item No.	Bid Item Description	Unit of Measure	Estimated Quantity	Unit Price	Amount
24		130550	TEMPORARY HYDROSEED	SQYD	1,280		
25		130620	TEMPORARY DRAINAGE INLET PROTECTION	EA	16		
26		130640	TEMPORARY FIBER ROLL	LF	4,690		
27		130680	TEMPORARY SILT FENCE	LF	2,140		
28		130710	TEMPORARY CONSTRUCTION ENTRANCE	EA	9		
29		130730	STREET SWEEPING	LS	1		
30		130900	TEMPORARY CONCRETE WASHOUT FACILITY	EA	2		
31		141000	TEMPORARY FENCE (TYPE ESA)	LF	810		
32		150203	ABANDON CULVERT (10")	EA	1		
33		150204	ABANDON CULVERT (48" RCP)	LF	225		
34		150608	REMOVE CHAIN LINK FENCE	LF	45		
35		150662	REMOVE METAL BEAM GUARD RAILING	LF	522		
36		150685	REMOVE IRRIGATION FACILITY	EA	1		
37		150712	REMOVE PAINTED PAVEMENT MARKINGS	SQFT	820		
38		150714	REMOVE THERMOPLASTIC TRAFFIC STRIPE	LF	14,000		
39		150722	REMOVE PAVEMENT MARKERS	EA	1,770		

No.	P/F	Bid Item No.	Bid Item Description	Unit of Measure	Estimated Quantity	Unit Price	Amount
40		150742	REMOVE ROADSIDE SIGN	EA	22		
41		150749	REMOVE POST (METAL TUBULAR)	EA	2		
42		150771	REMOVE ASPHALT CONCRETE DIKE	LF	1,325		
43		150812	REMOVE PIPE (10" SD)	LF	39		
44		150812	REMOVE PIPE (12" SD)	LF	18		
45		150812	REMOVE PIPE (24" RCP SD)	LF	73		
46		150812	REMOVE PIPE (48" RCP SD)	LF	587		
47		150820	REMOVE INLET	EA	4		
48		150821	REMOVE CONCRETE HEADWALL	EA	4		
49		150826	REMOVE STORM DRAIN MANHOLE	EA	4		
50		150859	REMOVE ASPHALT CONCRETE OVERSIDE DRAIN	EA	3		
51		150860	REMOVE BASE AND SURFACING	CY	1,840		
52		150880	REMOVE TEMPORARY DETOUR	LS	1		
53		151540	RECONSTRUCT CHAIN LINK FENCE	LF	35		
54		151XXX	RECONSTRUCT RAILING (METAL TUBULAR)	LF	260		
55		151XXX	RECONSTRUCT SIGN	EA	2		

No.	P/F	Bid Item No.	Bid Item Description	Unit of Measure	Estimated Quantity	Unit Price	Amount
56		152XXX	RELOCATE SURVEY MONUMENT	EA	8		
57		152320	RESET ROADSIDE SIGN	EA	4		
58		152370	RELOCATE MAILBOX	EA	1		
59		152390	RELOCATE ROADSIDE SIGN	EA	9		
60		152423	ADJUST SURVEY MONUMENT TO GRADE	EA	5		
61		152438	ADJUST GAS VALVE TO GRADE	EA	1		
62		152440	ADJUST STORM DRAIN MANHOLE TO GRADE	EA	3		
63		152454	ADJUST PULL BOX	EA	1		
64		153103	COLD PLANE ASPHALT CONCRETE PAVEMENT (0.17' MAXIMUM)	SQFT	**36,000**		
65		153103D	COLD PLANE ASPHALT CONCRETE PAVEMENT (0.17' MAXIMUM) (DETOUR)	SQFT	4,840		
66		153XXX	REMOVE CONCRETE (VALLEY GUTTER)	SQFT	2,270		
67		153XXX	REMOVE CONCRETE (MEDIAN PAVING)	SQFT	280		
68		153130	REMOVE CONCRETE CURB	LF	910		
69		153140	REMOVE CONCRETE SIDEWALK	SQYD	840		
70		153215	REMOVE CONCRETE (CURB AND GUTTER)	LF	2180		
71		153220	REMOVE CONCRETE (CHANNEL LINING)	CY	790		

No.	P/F	Bid Item No.	Bid Item Description	Unit of Measure	Estimated Quantity	Unit Price	Amount
72		155232	SAND BACKFILL (48" RCP SD)	CY	105		
73		156535	REMOVE RCB CULVERT	LF	163		
74		156572	REMOVE RAILING (METAL, TUBULAR)	LF	360		
75		156585	REMOVE CRASH CUSHION MODULE, SAND-FILLED	EA	1		
76		157XXX	CONCRETE BRIDGE REMOVAL, HEINZ DRIVEWAY	LS	1		
77		157XXX	TIMBER BRIDGE REMOVAL, WSID CANAL CROSSING	LS	1		
78		157XXX	REMOVE BOLLARD	EA	12		
79		157550	BRIDGE REMOVAL	LS	1		
80		160102	CLEARING AND GRUBBING	LS	1		
81		160120	REMOVE TREE	EA	13		
82		190101	ROADWAY EXCAVATION	CY	7,700		
83		190101D	ROADWAY EXCAVATION (DETOUR)	CY	1,380		
84		190105	ROADWAY EXCAVATION (TYPE Z-2) (AERIALLY DEPOSITED LEAD)	CY	1,220		
85		190139	ROADWAY EXCAVATION, REMOVE SILT (UNSUITABLE MATERIAL)	CY	2,450		
86		190XXX	ROADWAY EXCAVATION, REMOVE DREDGED MATERIAL (UNSUITABLE MATERIAL)	CY	1,590		

No.	P/F	Bid Item No.	Bid Item Description	Unit of Measure	Estimated Quantity	Unit Price	Amount
87	F	192037	STRUCTURE EXCAVATION (RETAINING WALL)	CY	1,822		
88	F	193013	STRUCTURE BACKFILL (RETAINING WALL)	CY	1,268		
89	F	193119	LEAN CONCRETE BACKFILL	CY	571		
90		198010	IMPORTED BORROW	CY	49,100		
91		198010D	IMPORTED BORROW (DETOUR)	CY	22,700		
92	P	200XXX	LANDSCAPING PLANTING	LS	1		
93		20XXXX	COBBLE PAVING	SQFT	10,066		
94		20XXXX	BOULDERS	LS	1		
95		205034	DECOMPOSED GRANITE (TAN)	SQFT	15,000		
96	P	208000	IRRIGATION SYSTEM	LS	1		
97		210350	FIBER ROLL	LF	3,510		
98		210430	EROSION CONTROL (HYDROSEED)	SQYD	5,080		
99		260203	CLASS 2 AGGREGATE BASE	CY	12,200		
100		260203D	CLASS 2 AGGREGATE BASE (DETOUR)	CY	3,140		
101		390132	HOT MIX ASPHALT (TYPE A)	TON	8,890		
102		390132D	HOT MIX ASPHALT (TYPE A) (DETOUR)	TON	3,000		

No.	P/F	Bid Item No.	Bid Item Description	Unit of Measure	Estimated Quantity	Unit Price	Amount
103	P	393004	GEOSYNTHETIC PAVEMENT INTERLAYER (PAVING FABRIC)	SQFT	121,000		
104		394073	PLACE HOT MIX ASPHALT DIKE (TYPE A)	LF	38		
105		394073D	PLACE HOT MIX ASPHALT DIKE (TYPE A) (DETOUR)	LF	62		
106	P-F	477020	MECHANICALLY STABILIZED EMBANKMENT	SQFT	82,177		
107		477XXX	TEMPORARY RETAINING WALL (DETOUR)	LS	1		
108	P	480700	FURNISH TEMPORARY PREFABRICATED MODULAR STEEL TRUSS BRIDGE	EA	1		
109		480800	ERECT TEMPORARY PREFABRICATED MODULAR STEEL TRUSS BRIDGE	EA	1		
110	P	490595	108" PERMANENT STEEL CASING	LF	340		
111		490606	42" CAST-IN-DRILLED-HOLE CONCRETE PILING (DETOUR)	LF	510		
112		490618	96" CAST-IN-DRILLED-HOLE CONCRETE PILING	LF	2,400		
113	P	500010	PRESTRESSING	LS	1		
114	F	510053	STRUCTURAL CONCRETE (BRIDGE)	CY	4,836		
115	F	510053D	STRUCTURAL CONCRETE (BRIDGE) (DETOUR)	CY	124		
116	F	510060	STRUCTURAL CONCRETE, RETAINING WALL	CY	394		
117	F	510072	STRUCTURAL CONCRETE (BARRIER SLAB)	CY	1,027		

No.	P/F	Bid Item No.	Bid Item Description	Unit of Measure	Estimated Quantity	Unit Price	Amount
118	F	510080	STRUCTURAL CONCRETE, APPROACH SLAB	CY	491		
119	F	510080D	STRUCTURAL CONCRETE, APPROACH SLAB (DETOUR)	CY	54		
120	F	510502	MINOR CONCRETE (OUTFALL STRUCTURE)	EA	2		
121	F	510503	LATERAL SIDE CONNECTION	EA	3		
122	F	510504	CAST-IN-PLACE CONCRETE COLLAR	EA	7		
123	F	510505	72" X 96" STORM DRAIN JUNCTION STRUCTURE	EA	1		
124	F	510506	72" X 240" STORM DRAIN JUNCTION STRUCTURE	EA	1		
125	F	510507	84" X 144" STORM DRAIN JUNCTION STRUCTURE	EA	1		
126	F	511035	ARCHITECTURAL TREATMENT (BRIDGE)	SQFT	3,975		
127	F	511035	ARCHITECTURAL TREATMENT (RETAINING WALL)	SQFT	82,177		
128	P	512204	FURNISH PRECAST PRESTRESSED CONCRETE GIRDER (50'-60')	EA	20		
129	P	512205	FURNISH PRECAST/PRESTRESSED CONCRETE GIRDER (60'-70')	EA	40		
130	F	512500	ERECT PRECAST PRESTRESSED CONCRETE GIRDER	EA	60		
131	P	519100	JOINT SEAL (MR 2")	LF	604		
132	P-F	520102	BAR REINFORCING STEEL (BRIDGE)	LB	2,214,596		

No.	P/F	Bid Item No.	Bid Item Description	Unit of Measure	Estimated Quantity	Unit Price	Amount
133	P-F	520102D	BAR REINFORCING STEEL (BRIDGE) (DETOUR)	LB	72,500		
134	P-F	520103	BAR REINFORCING STEEL (RETAINING WALL)	LB	44,802		
135	P-F	520120	HEADED BAR REINFORCEMENT	EA	320		
136		560300	LINCOLN HIGHWAY HISTORIC SIGN	EA	2		
137		566011	ROADSIDE SIGN	EA	19		
138	P	650010	12" REINFORCED CONCRETE PIPE	LF	54		
139	P	650014	18" REINFORCED CONCRETE PIPE	LF	408		
140	P	650018	24" REINFORCED CONCRETE PIPE	LF	21		
141	P	650022	30" REINFORCED CONCRETE PIPE	LF	77		
142	P	650026	36" REINFORCED CONCRETE PIPE	LF	209		
143	P	650034	48" REINFORCED CONCRETE PIPE	LF	1,754		
144	P	650042	60" REINFORCED CONCRETE PIPE	LF	160		
145	P	650305	10" REINFORCED CONCRETE PIPE (CLASS III)	LF	97		
146		685200	DRAINAGE WICK	LF	168,400		
147		685200D	DRAINAGE WICK (DETOUR)	LF	16,600		
148		707241	STORM DRAIN MANHOLE (72")	EA	5		

No.	P/F	Bid Item No.	Bid Item Description	Unit of Measure	Estimated Quantity	Unit Price	Amount
149		7072XX	STORM DRAIN MANHOLE (84")	EA	2		
150		7072XX	STORM DRAIN MANHOLE (96")	EA	3		
151		707XXX	DROP INLET (48" OPENING)	EA	4		
152		707XXX	DROP INLET (30" OPENING)	EA	9		
153		707XXX	AREA DRAIN	EA	1		
154		707XXX	DROP INLET (TYPE G1)	EA	1		
155		707XXX	DROP INLET (TYPE G2 MODIFIED)	EA	1		
156		710100	TEMPORARY DETOUR DRAINAGE	LS	1		
157	F	721017	ROCK SLOPE PROTECTION (FACING, METHOD B)	CY	107		
158	F	721019	ROCK SLOPE PROTECTION (BACKING NO. 3, METHOD B)	CY	68		
159		721430	MINOR CONCRETE (CHANNEL LINING)	CY	86		
160		721810	SLOPE PAVING (CONCRETE)	CY	104		
161		73XXXX	MINOR CONCRETE (COPING TYPE A)	CY	46		
162		73XXXX	MINOR CONCRETE (COPING TYPE B)	CY	117		
163		73XXXX	MINOR CONCRETE (CONCRETE UTILITY CAP)	CY	13		
164		730010	MINOR CONCRETE (RETAINING CURB)	LF	320		

No.	P/F	Bid Item No.	Bid Item Description	Unit of Measure	Estimated Quantity	Unit Price	Amount
165		730020	MINOR CONCRETE (CURB)	CY	85		
166		730045	MINOR CONCRETE (VALLEY GUTTER)	CY	120		
167		730070	DETECTABLE WARNING SURFACE	SQFT	205		
168		731504	MINOR CONCRETE (CURB AND GUTTER)	CY	210		
169		731509	MINOR CONCRETE (CONCRETE MOW STRIP)	LF	2,200		
170		731511	MINOR CONCRETE (ISLAND PAVING)	CY	140		
171		731516	MINOR CONCRETE (DRIVEWAY)	CY	58		
172		731521	MINOR CONCRETE (SIDEWALK)	CY	360		
173		731623	MINOR CONCRETE (CURB RAMP)	CY	21		
174		7316XX	MINOR CONCRETE (MEDIAN)	CY	38		
175		733040	MINOR CONCRETE (GUTTER)	LF	1,295		
176	P-F	750041	ISOLATION CASING	LB	49,611		
177	P-F	750501	MISCELLANEOUS METAL (BRIDGE)	LB	18,762		
178	P-F	750501D	MISCELLANEOUS METAL (BRIDGE) (DETOUR)	LB	182		
179	P-F	750505	BRIDGE DECK DRAINAGE SYSTEM	LB	1,749		
180	P	770100	SEWER LINE MODIFICATIONS	LS	1		

No.	P/F	Bid Item No.	Bid Item Description	Unit of Measure	Estimated Quantity	Unit Price	Amount
181	P	770200	WATER LINE MODIFICATIONS	LS	1		
182		800103	TEMPORARY FENCE (TYPE CL-6)	LF	5,050		
183	P	800320	CHAIN LINK FENCE (TYPE CL-4)	LF	5		
184		820131	OBJECT MARKER (TYPE K)	EA	3		
185		820134	OBJECT MARKER (TYPE P)	EA	2		
186	P-F	833XXX	METAL RAILING	LF	2,663		
187	P-F	833XXX	CHAIN LINK RAILING (TYPE 6 MODIFIED)	LF	622		
188	P	839XXX	CRASH CUSHION (QUADGUARD II)	EA	2		
189	P-F	839521	CABLE RAILING	LF	1,514		
190	F	839717	CONCRETE BARRIER (TYPE 732 MODIFIED)	LF	760		
191	F	839723A	CONCRETE BARRIER (TYPE 732B MODIFIED)	LF	2,728		
192	F	839800	CONCRETE BARRIER (PEDESTRIAN)	LF	3,507		
193	P-F	839801	REMOVABLE RAILING	LF	456		
194	P-F	839802	PEDESTRIAN RAILING (DETOUR)	LF	1,012		
195	P-F	839803	PROTECTIVE RAILING (DETOUR)	LF	1,007		
196		839804	COLLAPSIBLE BOLLARD	EA	3		

Revised per Addendum 1

No.	P/F	Bid Item No.	Bid Item Description	Unit of Measure	Estimated Quantity	Unit Price	Amount
197		840501	THERMOPLASTIC TRAFFIC STRIPE	LF	23,200		
198		840515	THERMOPLASTIC PAVEMENT MARKING	SQFT	1,540		
199		840656	PAINT TRAFFIC STRIPE (2-COAT)	LF	20,600		
200	P	850111	PAVEMENT MARKER (RETROREFLECTIVE)	EA	220		
201	P	860150	TRAFFIC SIGNAL STAGE CONSTRUCTION	LS	1		
202	P	860300	TRAFFIC SIGNAL AND LIGHTING (11TH ST & N. MACARTHUR DR)	LS	1		
203	P	860401	UNDERPASS LIGHTING SYSTEM	LS	1		
204	P	860402	STREET AND BRIDGE LIGHTING SYSTEM	LS	1		
205		860705	SIGNAL INTERCONNECT	LS	1		
206		960000	PORCELAIN ENAMEL SIGN	EA	36		
207		970000	BRONZE PLAQUE	EA	1		
208	F	994000	ENTRY MONUMENT STRUCTURE	EA	4		

Total Base Bid Amount: $_____

Notes:

1. **The Contract will be compared and awarded on the basis of the Total Base Bid Amount**.
2. The City reserves the right to reject all bids for any reason whatsoever.
3. Issuance of the "Notice to Proceed" will constitute the beginning of the Contract

CALIFORNIA JURAT WITH AFFIANT STATEMENT **GOVERNMENT CODE § 8202**

☐ See Attached Document (Notary to cross out lines 1–6 below)
☐ See Statement Below (Lines 1–6 to be completed only by document signer[s], *not* Notary)

1 _____
2 _____
3 _____
4 _____
5 _____
6 _____

Signature of Document Signer No. 1 *Signature of Document Signer No. 2 (if any)*

A notary public or other officer completing this certificate verifies only the identity of the individual who signed the document to which this certificate is attached, and not the truthfulness, accuracy, or validity of that document.

State of California
County of _____

Subscribed and sworn to (or affirmed) before me on this _____ day of _____, 20____, by *Date* *Month* *Year*

(1)_____

(and (2)_____),
Name(s) of Signer(s)

proved to me on the basis of satisfactory evidence to be the person(s) who appeared before me.

Signature _____
Signature of Notary Public

Seal
Place Notary Seal Above

OPTIONAL

Though this section is optional, completing this information can deter alteration of the document or fraudulent reattachment of this form to an unintended document.

Description of Attached Document

Title or Type of Document: _____ Document Date: _____

Number of Pages: _____ Signer(s) Other Than Named Above: _____

©2014 National Notary Association • www.NationalNotary.org • 1-800-US NOTARY (1-800-876-6827) Item #5910

NOTES:

1. DIMENSIONS OF THE STRUCTURAL SECTIONS ARE SUBJECT TO TOLERANCES SPECIFIED IN THE CALTRANS STANDARD SPECIFICATIONS.
2. PROFILE GRADE IS AT THE TOP OF HMA.
3. FOR PAVEMENT TRANSITION TAPERS AND CURB DETAILS, SEE LAYOUT AND CONSTRUCTION DETAILS SHEETS.
4. FOR RETAINING WALL DETAILS, SEE RETAINING WALL PLANS.
5. SEE LAYOUT SHEETS FOR LOCATION AND TYPE OF HMA DIKE, CURBS, SIDEWALKS, BARRIERS & FENCES.
6. SEE BRIDGE PLANS FOR BRIDGE CROSS SECTION.
7. FOR CONCRETE BARRIER DETAILS, SEE BRIDGE PLANS.
8. SEE DRAINAGE DETAILS FOR EXISTING CANAL WORK.
9. FOR LIP OF GUTTER ELEVATIONS, SEE CONSTRUCTION DETAILS SHEETS.
10. IN ISLAND PAVING, PROVIDE #3 REBARS @ 10" O.C. E.W. SIMILAR TO CITY STANDARD PLAN NO. 122.
11. PROVIDE #3 REBARS @ 10" O.C. E.W. FOR ALL SIDEWALKS PER CITY STANDARD PLAN NO. 122.
12. SEE REMOVALS PLANS FOR LIMITS OF REMOVALS.
13. FOR PEDESTRIAN WALKWAY AND MEDIAN AESTHETIC TREATMENT LIMITS, SEE AESTHETIC DETAIL SHEETS.
14. ALL PEDESTRIAN WALKWAYS AND CROSSWALKS MUST MEET ADA REQUIREMENTS.
15. ALL ENGINEERED FILL, CLASS 2 AB, AND HMA MUST MEET OR EXCEED THE MINIMUM RELATIVE COMPACTION REQUIREMENTS AND BE TESTED IN ACCORDANCE WITH THE CITY STANDARD SPECIFICATIONS AND PLANS.
16. ALL EXPOSED SUBGRADE AREAS ARE SUBJECT TO EROSION CONTROL REQUIREMENTS.
17. SEE LAYOUT SHEETS FOR EASEMENTS.
18. WICK DRAINS NOT SHOWN, SEE CONSTRUCTION DETAILS SHEETS.
19. TOP 4 FEET OF FG MUST HAVE AN MINIMUM R-VALUE OF 15 FOR IMPORT BORROW.

TYPICAL STRUCTURAL SECTIONS

1

1. 7" HMA (TYPE A)
   21" CL2 AB
2. 2" HMA (TYPE A) OVERLAY
   GEOSYNTHETIC PAVEMENT INTERLAYER (PAVING FABRIC)
3. 6" MINOR CONCRETE (SIDEWALK)
   6" CL2 AB
4. 3" HMA (TYPE A)
   6" CL2 AB
5. VARIABLE DEPTH HMA (TYPE A) OVERLAY – 2" MIN, COLD PLANE EXISTING PAVEMENT 2" MAX, AS NEEDED, TO MAINTAIN MIN 2" OVERLAY DEPTH
   GEOSYNTHETIC PAVEMENT INTERLAYER (PAVING FABRIC)
6. 3" HMA (TYPE A)
   8" CL2 AB
7. 6" MINOR CONCRETE (ISLAND PAVING)
   6" CL2 AB

11TH STREET DESIGN DESIGNATION

ROAD CLASSIFICATION: URBAN ARTERIAL
ADT (2010)= 12290
DESIGN SPEED= 45 MPH
PERCENT TRUCKS= 14%
R-VALUE= 15
TRAFFIC INDEX= 11

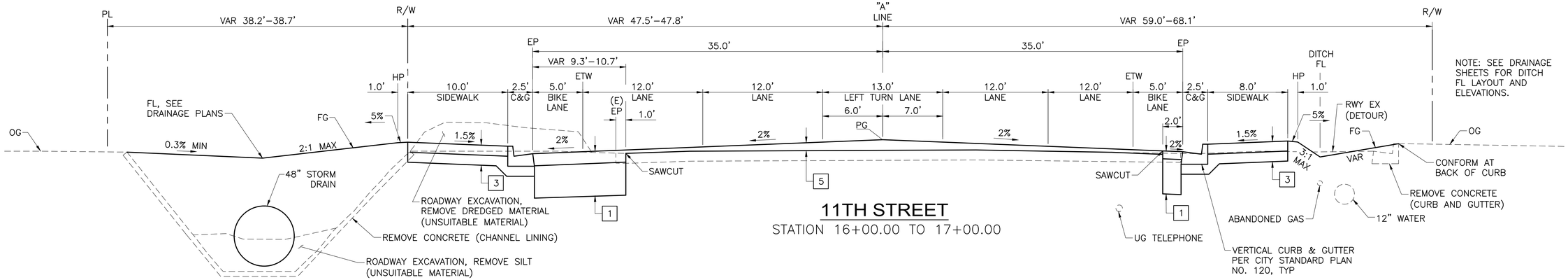

11TH STREET
STATION 16+00.00 TO 17+00.00

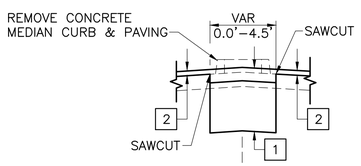

STATION 10+74.80
TO 11+24.85

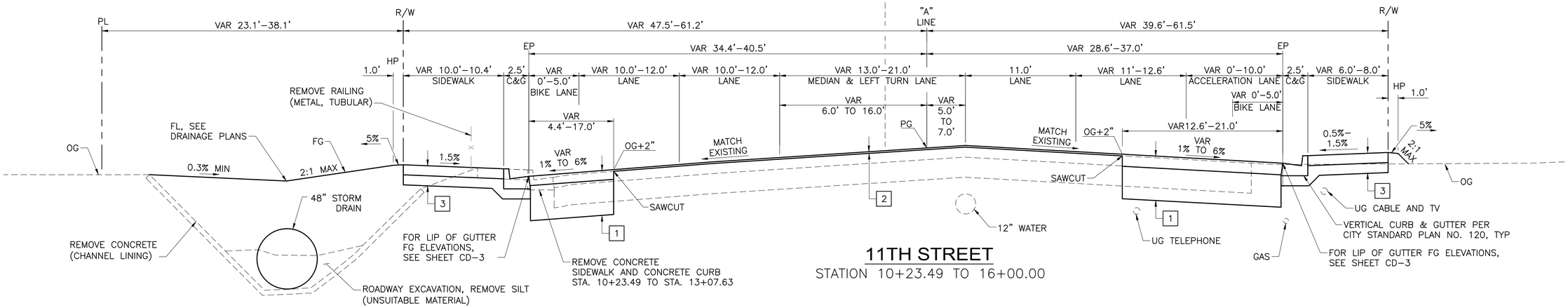

11TH STREET
STATION 10+23.49 TO 16+00.00

11/06/14
DATE

Melissa K. McConnell
REGISTERED CIVIL ENGINEER

REGISTERED PROFESSIONAL ENGINEER
MELISSA K. McCONNELL
No. 72264
Exp. 06/30/16
CIVIL
STATE OF CALIFORNIA

dh drakehaglan AND ASSOCIATES
11060 White Rock Road, Suite 200
Rancho Cordova, CA 95670

REVISIONS			APPROVED
SYM	DATE	DESCRIPTION	
1		REVISED PER ADDENDUM No. 1	

DESIGNED BY	DRAWN BY	CHECKED BY	SCALE
M. MCCONNELL	M. MCCONNELL	J. SILVA	NO SCALE

CITY OF TRACY

11th ST EAST TRACY OVERHEAD
TYPICAL SECTIONS

X-1

SHEET 2
OF 260 SHEETS

MATCHLINE - SEE SHEET RE-3

MATCHLINE - SEE SHEET RE-5

"M" 20+09.01 8.16' LT
END REMOVE CONCRETE CURB

"M" 20+09.02 40.44' LT
END REMOVE CONCRETE
(CURB AND GUTTER)

"M" 20+08.96 7.98' RT
END REMOVE CONCRETE CURB

"M" 20+09.01 39.63' RT
END REMOVE CONCRETE (CURB AND GUTTER)
END REMOVE BASE AND SURFACING

"M" 20+09.02 51.00' RT
END REMOVE CONCRETE SIDEWALK

"M" LINE

20+50

20+00

19+00

N. MACARTHUR DR

REMOVE CONCRETE
(CURB AND GUTTER)
128 LF

SAWCUT

TR-7

TR-6

ADJUST PULL BOX

UPRR R/W

TR-10

TR-8

TR-9

REMOVE CONCRETE (CHANNEL LINING)
ROADWAY EXCAVATION,
REMOVE SILT (UNSUITABLE MATERIAL)

REMOVE IRRIGATION
FACILITY

REMOVE CONCRETE
(MEDIAN PAVING) 77 SF

"M" 19+70.48 20.43' RT
END REMOVE CONCRETE CURB

SEE NOTE 8

SAWCUT

REMOVE CONCRETE
SIDEWALK

REMOVE CONCRETE
(CURB AND GUTTER) 1487 LF

REMOVE CONCRETE CURB
245 LF

"M" 18+81.32 4.67'
BEGIN REMOVE CONCRETE CURB

REMOVE CONCRETE (CHANNEL LINING)
ROADWAY EXCAVATION,
REMOVE SILT (UNSUITABLE MATERIAL)

℄ UPRR R/W

UPRR TRACKS

R/W

UPRR R/W

"A" 26+83.21 49.34' LT
END REMOVE MBGR

EDGE OF EXIST
BRIDGE DECK

ROADWAY EXCAVATION,
REMOVE DREDGED MATERIAL
(UNSUITABLE MATERIAL)

BRIDGE REMOVAL, SEE BRIDGE
PLANS FOR REMOVAL DETAILS

RELOCATE SURVEY MONUMENT
IN NEW LOCATION TO BE
AUTHORIZED BY ENGINEER

26+00

27+00

28+00

"A" LINE

29+00

30+00

31+00

"A" 26+52.59 8.99' RT
END REMOVE MBGR

"R" 12+61.91 45.46' LT

"A" 25+72.94 39.01' RT
BEGIN REMOVE MBGR

11TH STREET

EXIST ACCESS ROAD EP

EDGE OF EXIST
BRIDGE DECK

REMOVE MBGR 102 LF

EXIST EP

UPRR R/W

12+00

"R" LINE

13+00

14+00

REMOVE MBGR 250 LF

"R" 11+68.82 6.85' LT
BEGIN REMOVE BASE AND SURFACING

EXIST ACCESS ROAD EP

11+00

R/W

"R" 14+13.00 29.05' RT
BEGIN REMOVE BASE AND SURFACING

REMOVE CONCRETE
SIDEWALK

10+00

1

CITY OF TRACY
SAN JOAQUIN COUNTY

REMOVE POST (METAL TUBULAR)

"R" 14+19.01 41.72' RT

APPROVED FOR REMOVAL WORK ONLY

11/06/14
DATE

REGISTERED CIVIL ENGINEER

REGISTERED PROFESSIONAL ENGINEER
MELISSA K. McCONNELL
No. 72264
Exp. 06/30/16
CIVIL
STATE OF CALIFORNIA

dh drakehaglan
AND ASSOCIATES
11060 White Rock Road, Suite 200
Rancho Cordova, CA 95670

REVISIONS		
BY	DATE	DESCRIPTION
1		REVISED PER ADDENDUM No. 1

APPROVED

DESIGNED BY	DRAWN BY	CHECKED BY	SCALE
M. MCCONNELL	M. MCCONNELL	J. SILVA	1"=20'

CITY OF TRACY

11th ST EAST TRACY OVERHEAD
REMOVALS PLAN

RE-4

SHEET 12
OF 260 SHEETS

MATCHLINE - SEE SHEET RE-4

MATCHLINE - SEE SHEET RE-6

℄ UPRR R/W

UPRR R/W

TCE

REMOVE CONCRETE (CHANNEL LINING)
ROADWAY EXCAVATION, REMOVE SILT
(UNSUITABLE MATERIAL)

CITY OF TRACY
SAN JOAQUIN COUNTY

TIMBER BRIDGE REMOVAL,
WSID CANAL CROSSING

PL

EASEMENT

R/W

REMOVE ASPHALT
CONCRETE DIKE 137 LF

EDGE OF EXIST BRIDGE DECK

BRIDGE REMOVAL

R/W

REMOVE MBGR 68 LF

"A" 36+46.17 30.90' LT
BEGIN REMOVE ASPHALT
CONCRETE DIKE

"A" 37+16.67 33.38' LT
END REMOVE MBGR

"A" 36+49.31 27.94' LT
BEGIN REMOVE MBGR

ROADWAY EXCAVATION,
REMOVE DREDGED MATERIAL
(UNSUITABLE MATERIAL)

32+00 33+00 "A" LINE 34+00 35+00 36+00 37+00

11TH STREET

EXIST ACCESS ROAD EP

"A" 36+46.00 30.42' RT
BEGIN REMOVE ASPHALT
CONCRETE DIKE

REMOVE ASPHALT
CONCRETE DIKE 184 LF

15+00 16+00 "R" LINE 17+00 18+00 19+00 20+00

UPRR R/W

RELOCATE SURVEY MONUMENT
IN NEW LOCATION TO BE
AUTHORIZED BY ENGINEER

EDGE OF EXIST
BRIDGE DECK

REMOVE BASE AND SURFACING

EXIST ACCESS ROAD EP

RELOCATE SURVEY MONUMENT
IN NEW LOCATION TO BE
AUTHORIZED BY ENGINEER

1

RELOCATE SURVEY MONUMENT
IN NEW LOCATION TO BE
AUTHORIZED BY ENGINEER

R/W

PL

APPROVED FOR REMOVAL WORK ONLY

11/06/14
DATE

REGISTERED CIVIL ENGINEER

PROFESSIONAL ENGINEER
MELISSA K. McCONNELL
No. 72264
Exp. 06/30/16
CIVIL
STATE OF CALIFORNIA

dh drakehaglan AND ASSOCIATES
11060 White Rock Road, Suite 200
Rancho Cordova, CA 95670

REVISIONS

SYM	DATE	DESCRIPTION	APPROVED
1		REVISED PER ADDENDUM No. 1	

DESIGNED BY M. McCONNELL
DRAWN BY M. McCONNELL
CHECKED BY J. SILVA
SCALE 1"=20'

CITY OF TRACY

11th ST EAST TRACY OVERHEAD
REMOVALS PLAN

RE-5

SHEET 13
OF 260 SHEETS

MATCHLINE - SEE SHEET L-4

MATCHLINE - SEE SHEET L-6

℄ UPRR CORE R/W

UPRR R/W

"A" 32+10.22 61.48' LT
BEGIN RW6

TCE

MINOR CONCRETE (CHANNEL LINING)

CONCRETE BARRIER
(PEDESTRIAN)

CONC BARRIER
TYPE 732B (MOD)

CITY OF TRACY
SAN JOAQUIN COUNTY

"A" 36+65.50 60.47' LT
END RW6

PL

TCE

EASEMENT

R/W

RW6

RW4

48"

30"

F

UPRR R/W

32+00 33+00 34+00 35+00 36+00 37+00

"A" LINE

5

"A" 33+01.51 2.00' RT

"A" 33+01.20 32.13' RT
ANGLE POINT

11TH STREET

"A" 36+97.88 2.00' LT

"A" EC 36+98.46 1.92' RT

"A" EC 36+76.51 8.31' RT

"A" BC 36+61.51 10.00' RT

"A" 36+61.17 40.13' RT
ANGLE POINT

"R" PI 18+68.60

21

15+00 16+00 17+00 18+00 19+00 20+00

"R" LINE

18

19

20

22

"R" PI 19+30.99

"R" PI 19+34.55

ACCESS ROAD EP

20.00'
TYP

RW5

RW4

"A" 34+55.73 57.86' RT
END RW5

"R" PI 17+34.07

"R" 14+65.06 20.00' RT
CONFORM TO EXIST

ACCESS ROAD EP

CONCRETE BARRIER
(PEDESTRIAN)

R/W

CONC BARRIER
TYPE 732B (MOD)

"R" 17+34.07 20.02' RT
ANGLE POINT

"R" 18+77.99 19.00' RT
ANGLE POINT

ACCESS ROAD EP

1

IMPACT TO IRRIGATION
FACILITIES, SEE DETOUR SHEETS

"R" 19+21.90 19.00' RT
ANGLE POINT

TCE

LINE TABLE

No.	BEARING	DISTANCE
5	S89° 37' 07"E	2421.55'
18	S89° 37' 07"E	569.47'
19	N84° 40' 14"E	134.53'
20	S88° 20' 45"E	62.39'
21	S89° 37' 07"E	3.56'
22	S83° 54' 29"E	114.28'

11/06/14
DATE

REGISTERED CIVIL ENGINEER

REGISTERED PROFESSIONAL ENGINEER
MELISSA K. MCCONNELL
No. 72264
Exp. 06/30/16
CIVIL
STATE OF CALIFORNIA

dh drakehaglan
AND ASSOCIATES
11060 White Rock Road, Suite 200
Rancho Cordova, CA 95670

REVISIONS			
SYM	DATE	DESCRIPTION	APPROVED
1		REVISED PER ADDENDUM No. 1	

DESIGNED BY	M. MCCONNELL
DRAWN BY	M. MCCONNELL
CHECKED BY	J. SILVA
SCALE	1"=20'

CITY OF TRACY

11th ST EAST TRACY OVERHEAD
LAYOUT

L-5

SHEET 19
OF 260 SHEETS

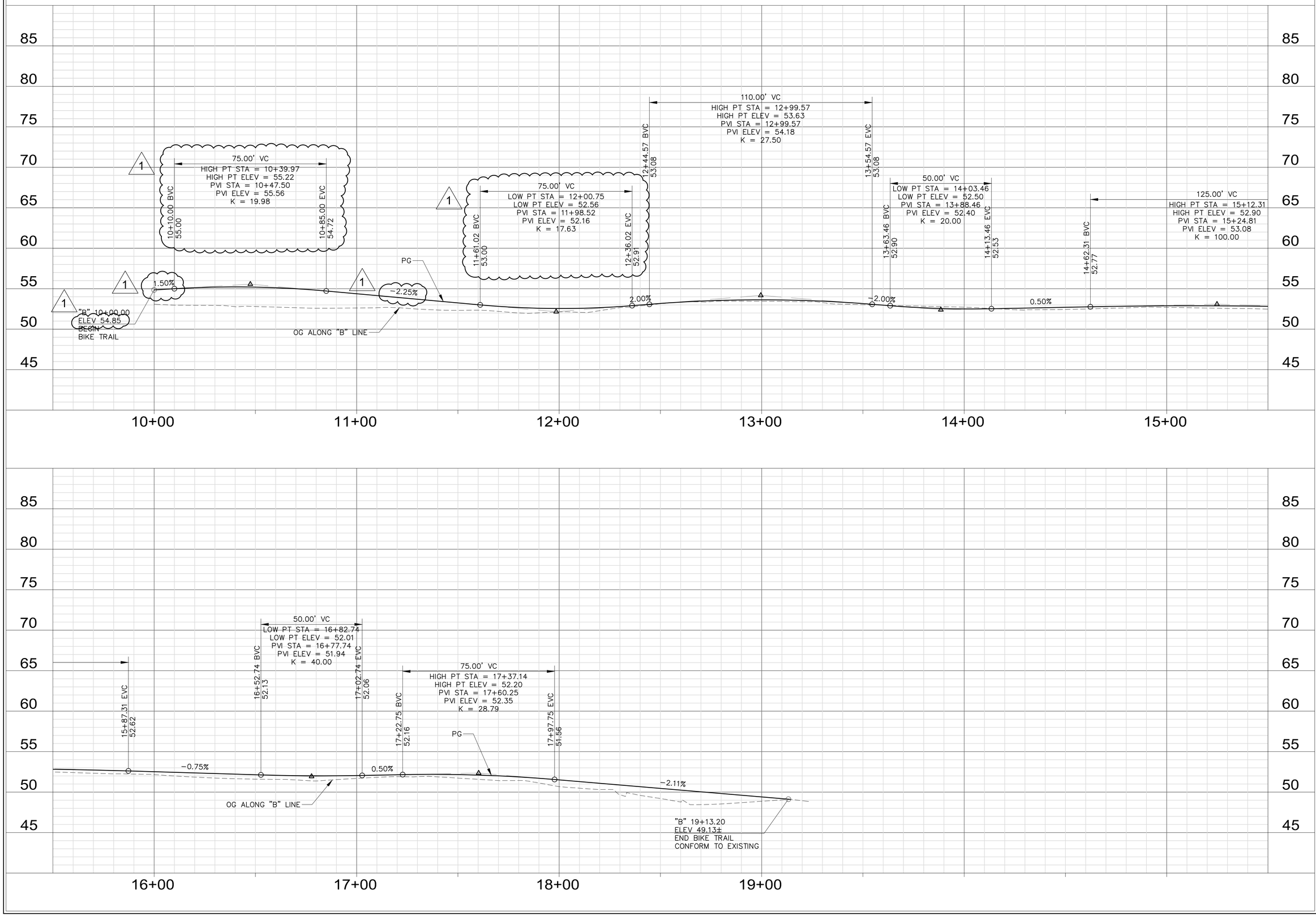

11/06/14
DATE

REGISTERED CIVIL ENGINEER

REGISTERED PROFESSIONAL ENGINEER
M. K. McCONNELL
No. 72264
Exp. 06/30/16
CIVIL
STATE OF CALIFORNIA

dh drakehaglan AND ASSOCIATES
11080 White Rock Road, Suite 200
Rancho Cordova, CA 95670

REVISIONS			APPROVED
STM	DATE	DESCRIPTION	
1		REVISED PER ADDENDUM No. 1	

DESIGNED BY	DRAWN BY	CHECKED BY	SCALE
M. MCCONNELL	M. MCCONNELL	J. SILVA	HORIZ 1"=20' VERT 1"=5'

CITY OF TRACY

11th ST EAST TRACY OVERHEAD

"B" LINE PROFILE

P-4

SHEET 25
OF 260 SHEETS

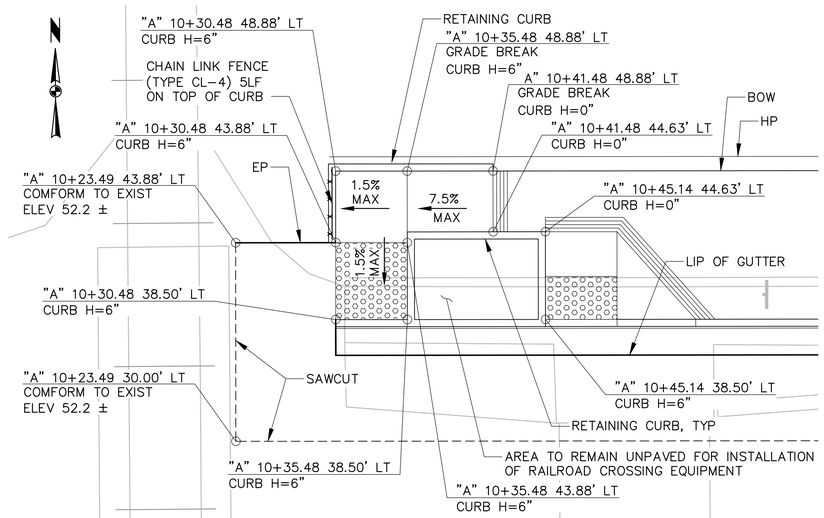

CURB RAMP DETAIL A

SCALE 1" = 5'

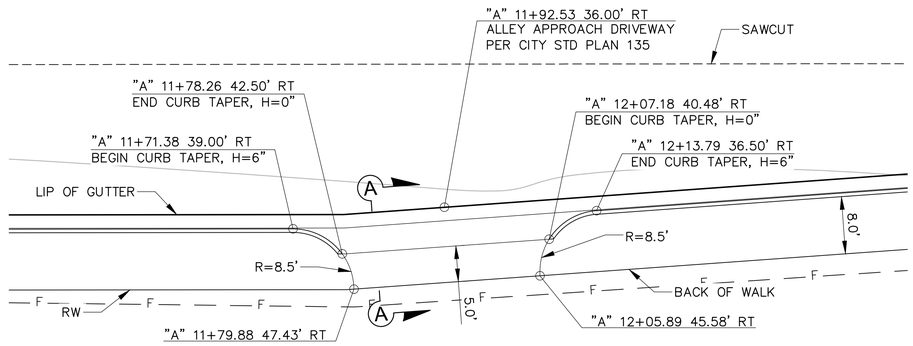

(SHEET L-1)

DRIVEWAY DETAIL 7

SCALE 1" = 10'

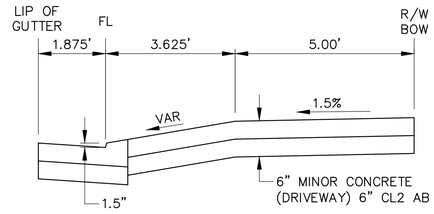

SECTION A-A

SCALE: NTS

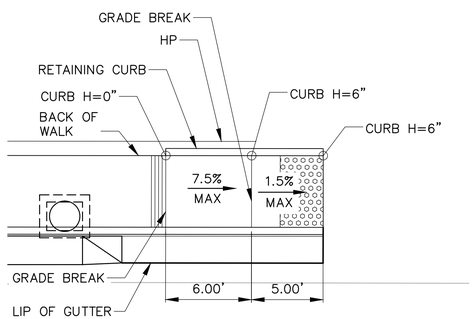

CURB RAMP DETAIL B

SCALE 1" = 5'

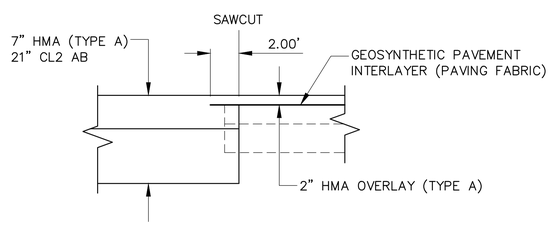

GEOSYNTHETIC PAVEMENT INTERLAYER (PAVING FABRIC)

SCALE: NTS

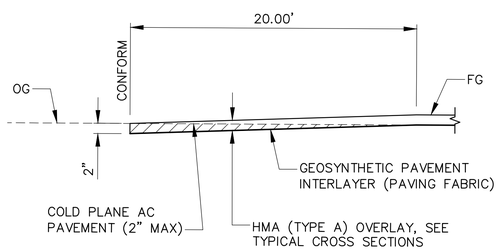

COLD PLANE CONFORM

SCALE 1" = 5'

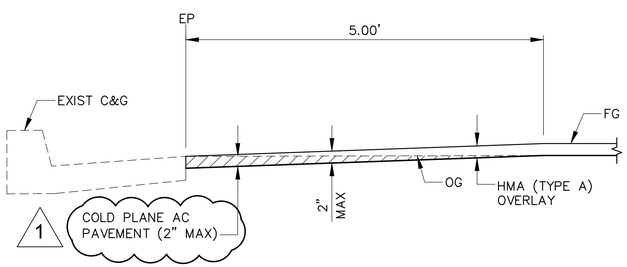

WEDGE GRIND

SCALE: NTS

11/06/14
DATE

REGISTERED CIVIL ENGINEER

REGISTERED PROFESSIONAL ENGINEER
MELISSA K. McCONNELL
No. 72264
Exp. 06/30/16
CIVIL
STATE OF CALIFORNIA

dh drakehaglan AND ASSOCIATES
11080 White Rock Road, Suite 200
Rancho Cordova, CA 95670

REVISIONS			
SYM	DATE	DESCRIPTION	APPROVED
1		REVISED PER ADDENDUM No. 1	

DESIGNED BY	DRAWN BY	CHECKED BY	SCALE
M. MCCONNELL	M. MCCONNELL	J. SILVA	AS SHOWN

CITY OF TRACY

11th ST EAST TRACY OVERHEAD
CONSTRUCTION DETAILS

CD-7

SHEET 35
OF 260 SHEETS

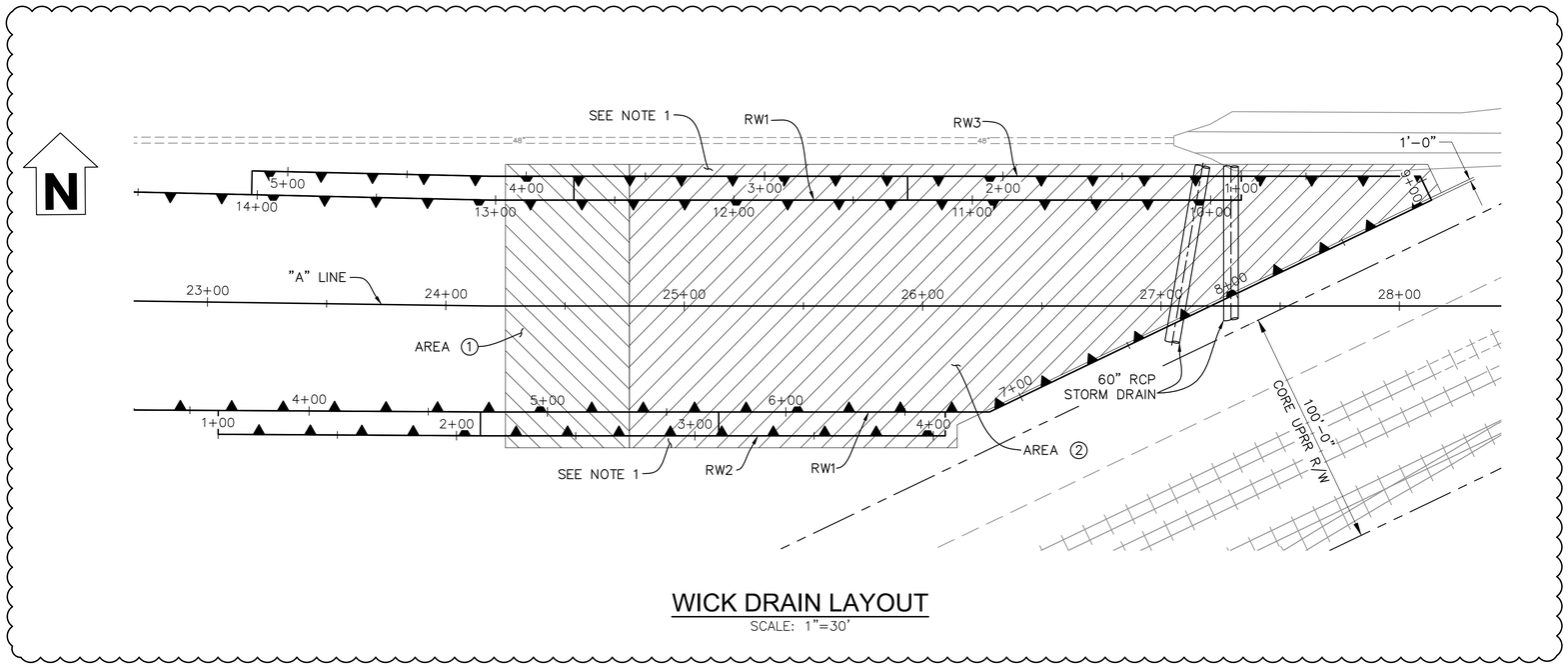

1

WICK DRAIN LAYOUT

SCALE: 1"=30'

NOTES:

1. AT LEAST ONE ROW OF VERTICAL WICK DRAINS MUST BE PLACED OUTSIDE EXTERIOR WALLS.
2. SEE CONSTRUCTION DETAILS SHEET CD-13 FOR DETAILS NOT SHOWN.

LEGEND:

LIMITS OF WICK DRAINS IN AREAS (1) AND (4).

LIMITS OF WICK DRAINS IN AREAS (2) AND (3).

AREA	MAXIMUM SPACING	START STA ("A" LINE)	END STA ("A" LINE)	TIP ELEVATION
(1)	S = 8'	24+25.00	24+77.00	20.00
(2)	S = 4'	24+77.00	27+18.44	10.00
(3)	S = 4'	30+46.04	32+87.00	10.00
(4)	S = 8'	32+87.00	33+53.00	20.00

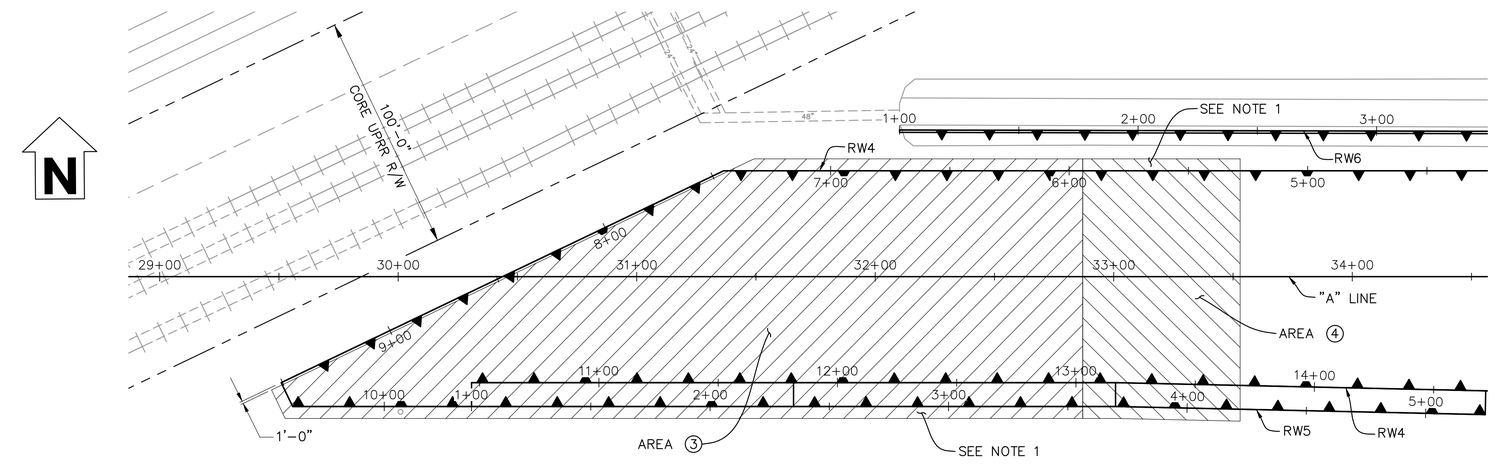

WICK DRAIN LAYOUT

SCALE: 1"=30'

11/06/14
DATE

REGISTERED CIVIL ENGINEER

PROFESSIONAL ENGINEER
MELISSA K. McCONNELL
No. 72264
Exp. 06/30/16
CIVIL
STATE OF CALIFORNIA

dh drakehaglan AND ASSOCIATES
11060 White Rock Road, Suite 200
Rancho Cordova, CA 95670

REVISIONS			
STN	DATE	DESCRIPTION	APPROVED
1		REVISED PER ADDENDUM No. 1	

DESIGNED BY	M. BURGARD
DRAWN BY	K. DRESBACH
CHECKED BY	J. ELMENSDORP
SCALE	AS SHOWN

CITY OF TRACY

11th ST EAST TRACY OVERHEAD
CONSTRUCTION DETAILS

CD-11

SHEET 39
OF 260 SHEETS

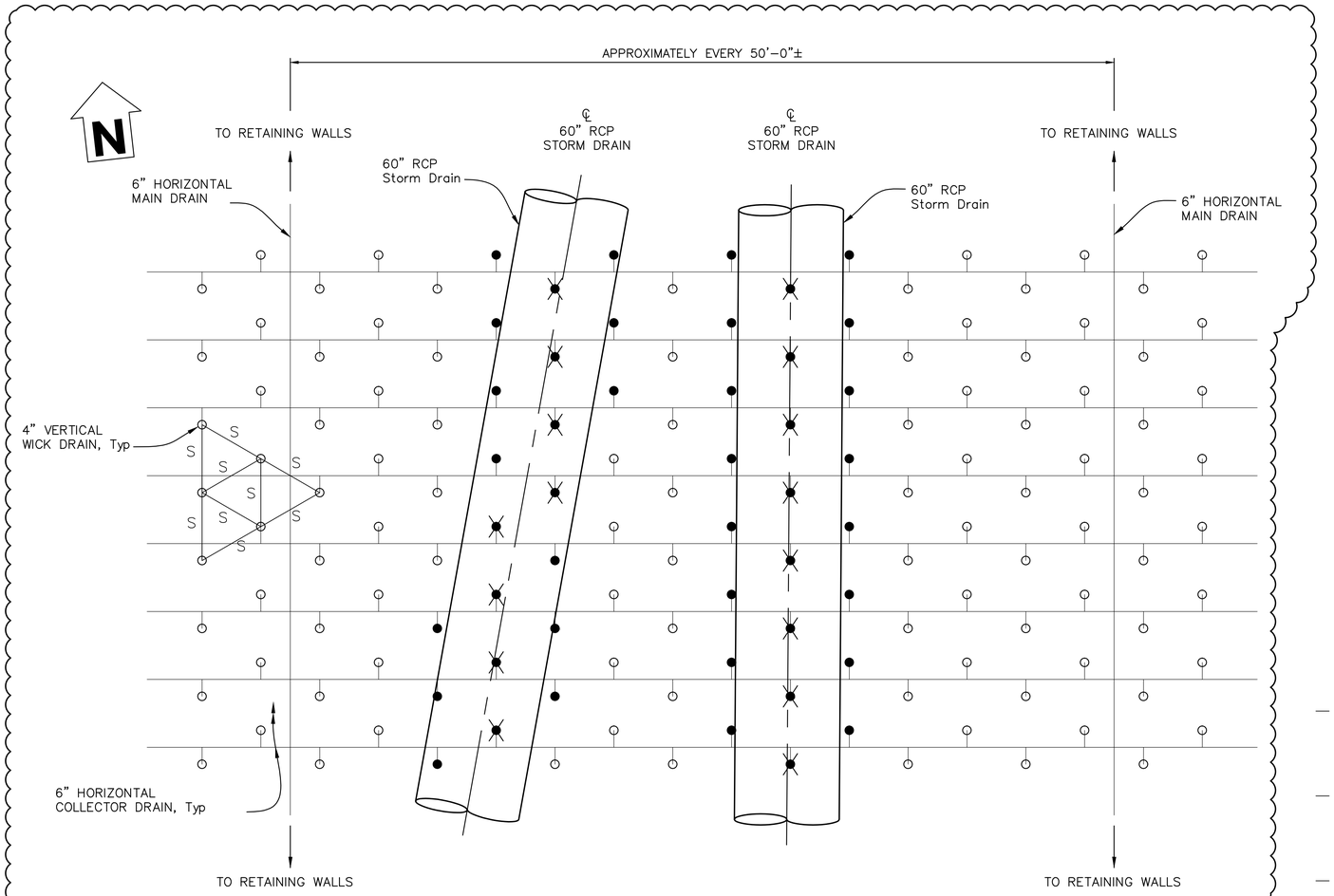

WICK DRAIN LAYOUT DETAIL
NO SCALE

LEGEND:

- WICKS TO BE OMITTED, SEE NOTE 3.
- WICKS TO BE RELOCATED, SEE NOTE 4.

NOTES:

1. HORIZONTAL COLLECTOR DRAINS MUST RUN PARALLEL TO "A" OR "D" LINE.
2. HORIZONTAL MAIN DRAINS MUST RUN PERPENDICULAR TO "A" OR "D" LINE.
3. UP TO ONE VERTICAL WICK MAY BE OMITTED PER HORIZONTAL COLLECTOR ROW WHERE IN CONFLICT WITH EACH 60" RCP STORM DRAIN.
4. OTHER WICKS MUST BE RELOCATED TO A SMALLER THAN TYPICAL SPACING AT LEAST 6" CLEAR FROM UTILITIES INCLUDING 60" RCP STORM DRAINS.
5. CONTRACTOR MUST POSITIVELY LOCATE ALL UTILITIES INCLUDING 60" RCP STORM DRAINS BEFORE PLACING WICK DRAINS.

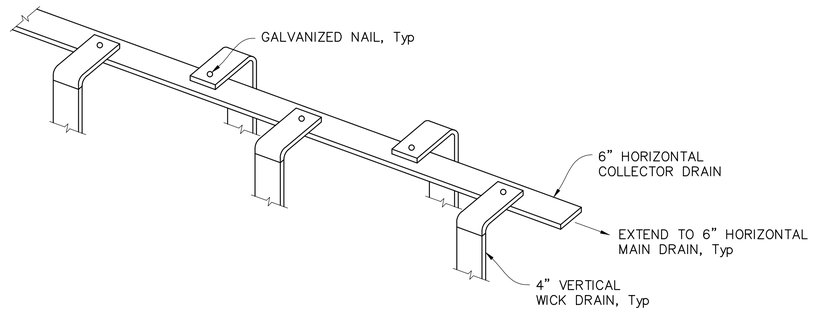

DRAINAGE WICK OUTLET
NO SCALE

DETAIL 1
NO SCALE

11/06/14
DATE

Melissa K. McConnell
REGISTERED CIVIL ENGINEER

PROFESSIONAL ENGINEER
REGISTERED
MELISSA K. McCONNELL
No. 72264
Exp. 06/30/16
CIVIL
STATE OF CALIFORNIA

dh drakehaglan AND ASSOCIATES
11060 White Rock Road, Suite 200
Rancho Cordova, CA 95670

REVISIONS			
STM	DATE	DESCRIPTION	APPROVED
1		REVISED PER ADDENDUM No. 1	

DESIGNED BY M. BURGARD
DRAWN BY K. DRESBACH
CHECKED BY J. ELMENSDORP
SCALE AS SHOWN

CITY OF TRACY

11th ST EAST TRACY OVERHEAD CONSTRUCTION DETAILS

CD-13

SHEET 41
OF 260 SHEETS

CONSTRUCTION NOTES:

1. REMOVE SDMH
2. REMOVE 48" X 89' RCP SD
3. REMOVE 48" X 7' RCP SD
4. REMOVE 8' X 5' X 103' RCB CULVERT
5. EXISTING 30", & 2-24" X 10' RCP SD
6. REMOVE CONCRETE CHANNEL LINING, SEE REMOVALS PLAN
7. CONNECT EXISTING STORM DRAIN TO NEW SDMH.
8. EXISTING SDMH
9. REMOVE 10' X 3' X 60' RCB CULVERT
10. REMOVE EXISTING BRIDGE FOOTING AND PORTION OF PILES, SEE BRIDGE PLANS

NOTE:

FOR "SECTION B-B" AND "SECTION C-C", SEE DRAINAGE DETAILS SHEET DD-1

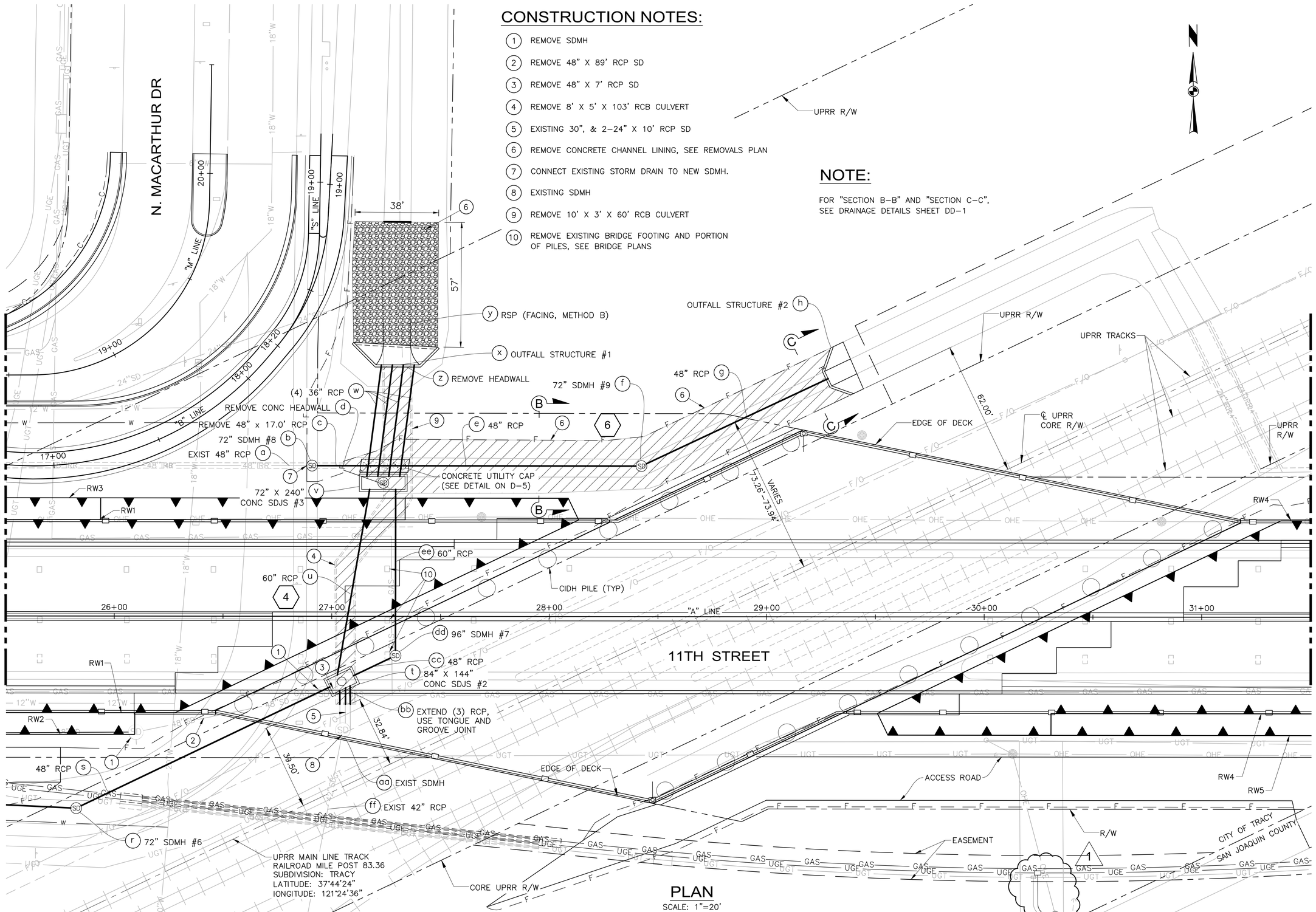

PLAN
SCALE: 1"=20'

THIS PLAN ACCURATE FOR DRAINAGE WORK ONLY

Matthew Phillips
REGISTERED CIVIL ENGINEER
11/06/14
DATE

REGISTERED PROFESSIONAL ENGINEER
MATTHEW J. PHILLIPS
No. 73161
Exp. 12/31/16
CIVIL
STATE OF CALIFORNIA

dh drakehaglan AND ASSOCIATES
11060 White Rock Road, Suite 200
Rancho Cordova, CA 95670

REVISIONS			
STM	DATE	DESCRIPTION	APPROVED
1		REVISED PER ADDENDUM No. 1	

DESIGNED BY M. LANGFORD/NELL
DRAWN BY M. LANGFORD/NELL
CHECKED BY J. SILVA
SCALE 1"=20'

CITY OF TRACY

11th ST EAST TRACY OVERHEAD
DRAINAGE PLAN

D-4

SHEET 46
OF 260 SHEETS

NO WORK ON THIS SHEET
FOR REFERENCE ONLY

MATCHLINE - SEE SHEET D-4

MATCHLINE - SEE SHEET D-6

TCE

R/W

RW6

RW4

RW5

CITY OF TRACY
SAN JOAQUIN COUNTY

PL

EASEMENT

R/W

32+00 33+00 "A" LINE 34+00 35+00 36+00 37+00

11TH STREET

ACCESS ROAD

1

R/W

PLAN

SCALE: 1"=20'

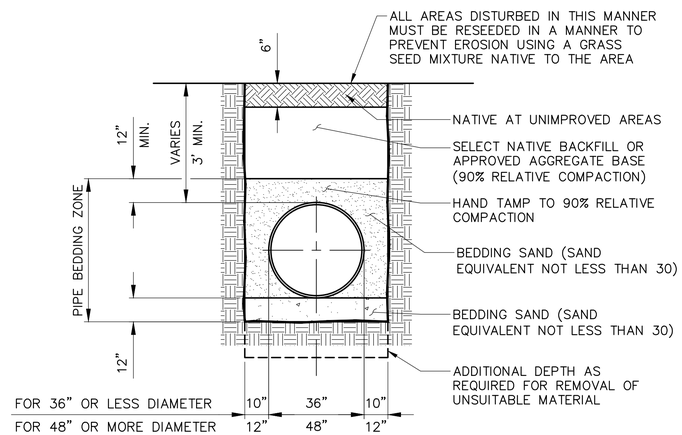

TRENCH DETAIL WITHIN UPRR R/W

NTS

NOTES:

1. BACKFILL MUST BE PLACED IN MAXIMUM 6" UNIFORM LAYERS & COMPACTED TO 90% OF MAXIMUM STD DENSITY AS DETERMINED BY AASHTO T–99 OR ASTM D–698.
2. REFER TO CITY OF TRACY STD #501 FOR ADDITIONAL NOTES & DETAIL.
3. NOTES & DETAILS SHOWN ON THIS DETAIL MUST PREVAIL IN THE UPRR R/W.
4. FOR ALL OTHER TRENCH DETAILS OUTSIDE UPRR R/W REFER TO CITY OF TRACY STD PLANS #501, #502, AND #561.

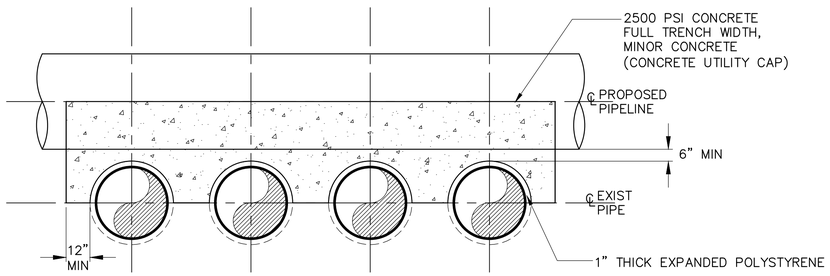

CONCRETE UTILITY CAP DETAIL

NO SCALE

THIS PLAN ACCURATE FOR DRAINAGE WORK ONLY

Matthew Lampa
REGISTERED CIVIL ENGINEER
11/06/14
DATE

REGISTERED PROFESSIONAL ENGINEER
MATTHEW LAMPA
No. 73161
Exp. 12/31/16
CIVIL
STATE OF CALIFORNIA

dh drakehaglan AND ASSOCIATES
11080 White Rock Road, Suite 200
Rancho Cordova, CA 95670

REVISIONS

STM	DATE	DESCRIPTION	APPROVED
1		REVISED PER ADDENDUM No. 1	

DESIGNED BY M. LAMPA
DRAWN BY M. LAMPA
CHECKED BY J. SILVA
SCALE 1"=20'

CITY OF TRACY

11th ST EAST TRACY OVERHEAD DRAINAGE PLAN

D-5

SHEET 47
OF 260 SHEETS

UTILITY INFORMATION TABLE				
POINT	UTILITY(s)	NORTHING	EASTING	COVER
224	UNKNOWN	2093173.2±	6298213.1±	
226	WATER	2093175.4±	6298276.7±	8.2'±
227	WATER	2093000.5±	6298260.7±	5.5'±
228	WATER	2092988.6±	6298261.5±	5.9'±
229	TELE COMM	2092992.2±	6298259.8±	4.0'±
230	TELE COMM	2093012.6±	6298303.1±	6.3'±
247	IRR	2093146.1±	6298321.9±	2.9'±
248	TELE COMM	2093172.6±	6298199.2±	7.0'±

N. MACARTHUR DRIVE
20+00
19+00
CAUTION – HIGH RISK
12 kV UNDERGROUND ELECTRIC
PACIFIC GAS AND ELECTRIC
PREVIOUSLY ABANDONED UGT
WATER LINE 1
WATER TH 226
UNKNOWN TH 224
TELE COMM TH 248
IRR TH 247
CUT AND CAP WATER LINE 3
NEW SD 3
PIPE CANAL 3
3 STORM DRAIN JS
UPRR R/W
R/W
UPRR TRACKS
CAUTION – HIGH RISK
12 kV OVERHEAD ELECTRIC
PACIFIC GAS AND ELECTRIC
11TH STREET
2 OR 3 REMOVE WATER LINE
3 REMOVE SD
NEW SD 3
26+00
27+00
28+00
"A" LINE 29+00
30+00
31+00
2 RELOCATE OHE TO UGE
3 REMOVE EXIST OHE
FROM
TO
MATCHLINE - SEE SHEET U-3
MATCHLINE - SEE SHEET U-5
PREVIOUSLY ABANDONED GAS
EXISTING GAS
ABANDONED GAS
EXISTING GAS
3 STORM DRAIN JS
GAS MAIN STA 27+27±
PREVIOUSLY ABANDONED UGT
RELOCATE GAS 2
NEW SD 3
WATER TH 227
TELE COMM TH 229
TELE COMM TH 230
WATER TH 228
NEW BRIDGE
3 REMOVE POLE
2 RELOCATE OHE TO UGE
3 REMOVE EXIST OHE
RELOCATE OHE TO UGE 2
REMOVE EXIST OHE 3
CITY OF TRACY
SAN JOAQUIN COUNTY
NEW WATER LINE 3
PREVIOUSLY ABANDONED UGT
CAUTION – HIGH RISK
12 kV UNDERGROUND ELECTRIC
PACIFIC GAS AND ELECTRIC
2 GAS & ELECT JOINT TRENCH
APPROX LOCATION OF PUE
R/W
UPRR TRACKS
TCE
TEMPORARY DETOUR, SEE TEMPORARY DETOUR PLANS
OHE&T
1

NOTE:

LOCATION OF UTILITY FACILITIES SHOWN ON THESE PLANS ARE APPROXIMATE AND MUST BE VERIFIED BY THE CONTRACTOR PRIOR TO CONSTRUCTION.

11/06/14
DATE
REGISTERED CIVIL ENGINEER

REGISTERED PROFESSIONAL ENGINEER
MELISSA K. McCONNELL
No. 72264
Exp. 06/30/16
CIVIL
STATE OF CALIFORNIA

dh drakehaglan AND ASSOCIATES
11060 White Rock Road, Suite 200
Rancho Cordova, CA 95670

REVISIONS			
STM	DATE	DESCRIPTION	APPROVED
1		REVISED PER ADDENDUM No. 1	

DESIGNED BY M. MCCONNELL
DRAWN BY M. MCCONNELL
CHECKED BY J. SILVA
SCALE 1"=20'

CITY OF TRACY

11th ST EAST TRACY OVERHEAD
UTILITY RELOCATION STAGING PLAN

U-4

SHEET 70
OF 260 SHEETS

UTILITY INFORMATION TABLE				
POINT	UTILITY(s)	NORTHING	EASTING	COVER
245	IRR	2093110.8±	6299254.4±	9.9'±
246	IRR	2093111.5±	6299263.3±	6.3'±
9037	PGE	2092979.6±	6298974.6±	
9038	PGE	2093039.6±	6298979.6±	

UPRR R/W
F/O
F/O
F/O
UPRR TRACKS
UPRR R/W
CITY OF TRACY
SAN JOAQUIN COUNTY
CAUTION – HIGH RISK
12 kV OVERHEAD ELECTRIC
PACIFIC GAS AND ELECTRIC
TCE
R/W
EASEMENT
PL
48" IRR
30" IRR
IRR
TH 246
IRR
TH 245
11TH STREET
3 REMOVE EXIST OHE
PREVIOUSLY
ABANDONED GAS
MATCHLINE - SEE SHEET U-4
MATCHLINE - SEE SHEET U-6
FROM
32+00
33+00
34+00
"A" LINE
35+00
36+00
37+00
RELOCATE OHE TO UGE 2
REMOVE EXIST OHE 3
PGE
TH 9038
4" PRESSURE
CONTROL FITTING
PREVIOUSLY
ABANDONED GAS
CAUTION – HIGH RISK
12 kV OVERHEAD ELECTRIC
PACIFIC GAS AND ELECTRIC
PREVIOUSLY
ABANDONED GAS
FROM
TO
RELOCATE GAS 2
PREVIOUSLY
ABANDONED UGT
2 GAS & ELECT JOINT TRENCH
2
GREEN
JT TRENCH
STA 33+39
93'± RT
REMOVE TEMPORARY
CONNECTION AFTER
COMPLETION OF
JOINT TRENCH 2
PREVIOUSLY
ABANDONED UGT
PGE
TH 9037
R/W
EXIST JOINT UTILITY TRENCH
CAUTION – HIGH RISK
12 kV UNDERGROUND ELECTRIC
PACIFIC GAS AND ELECTRIC
TEMPORARY DETOUR, SEE
TEMPORARY DETOUR PLANS
EXIST IRRIGATION
STANDPIPES CAPPED
BELOW GRADE
PROTECT EXIST IRRIGATION
FACILITIES IN PLACE
1
IRRIGATION DITCH BY
OTHERS, PROTECT IN PLACE

NOTE:

LOCATION OF UTILITY FACILITIES SHOWN ON THESE PLANS ARE APPROXIMATE AND MUST BE VERIFIED BY THE CONTRACTOR PRIOR TO CONSTRUCTION.

11/06/14
DATE
REGISTERED CIVIL ENGINEER

REGISTERED PROFESSIONAL ENGINEER
MELISSA K. McCONNELL
No. 72264
Exp. 06/30/16
CIVIL
STATE OF CALIFORNIA

dh drakehaglan AND ASSOCIATES
11060 White Rock Road, Suite 200
Rancho Cordova, CA 95670

REVISIONS			
STM	DATE	DESCRIPTION	APPROVED
1		REVISED PER ADDENDUM No. 1	

DESIGNED BY M. MCCONNELL
DRAWN BY M. MCCONNELL
CHECKED BY J. SILVA
SCALE 1"=20'

CITY OF TRACY

11th ST EAST TRACY OVERHEAD
UTILITY RELOCATION STAGING PLAN

U-5

SHEET 71
OF 260 SHEETS

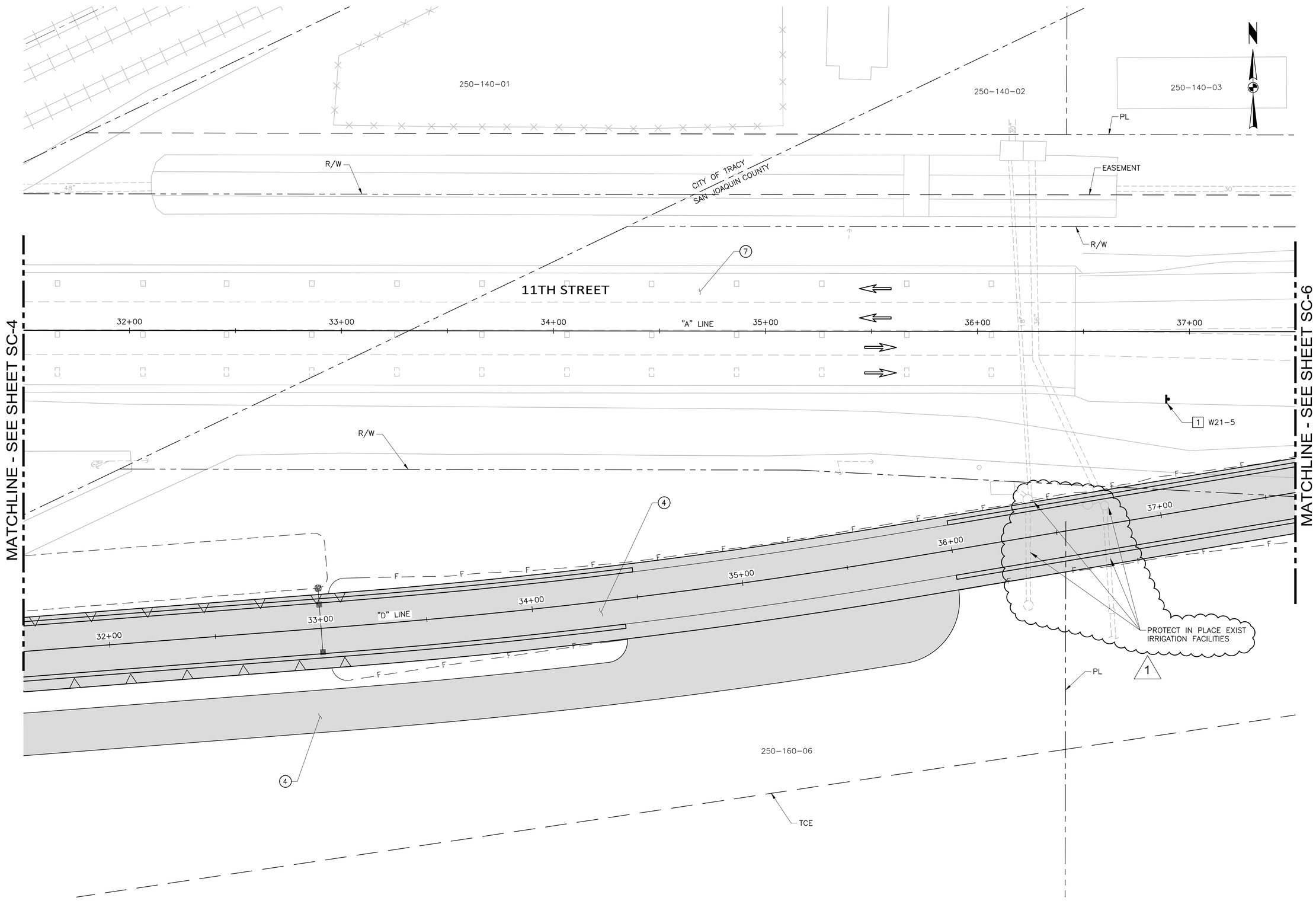

THIS PLAN ACCURATE FOR STAGE CONSTRUCTION AND TRAFFIC HANDLING ONLY

11/06/14
DATE

REGISTERED CIVIL ENGINEER

REGISTERED PROFESSIONAL ENGINEER
MELISSA K. McCONNELL
No. 72264
Exp. 06/30/16
CIVIL
STATE OF CALIFORNIA

drakehaglan AND ASSOCIATES
11060 White Rock Road, Suite 200
Rancho Cordova, CA 95670

REVISIONS			
SYM	DATE	DESCRIPTION	APPROVED
1		REVISED PER ADDENDUM No. 1	

DESIGNED BY M. MCCONNELL
DRAWN BY M. MCCONNELL
CHECKED BY J. SILVA
SCALE 1"=20'

CITY OF TRACY

11th ST EAST TRACY OVERHEAD
STAGE 1 CONSTRUCTION-TRAFFIC HANDLING

SC-5

SHEET 79
OF 260 SHEETS

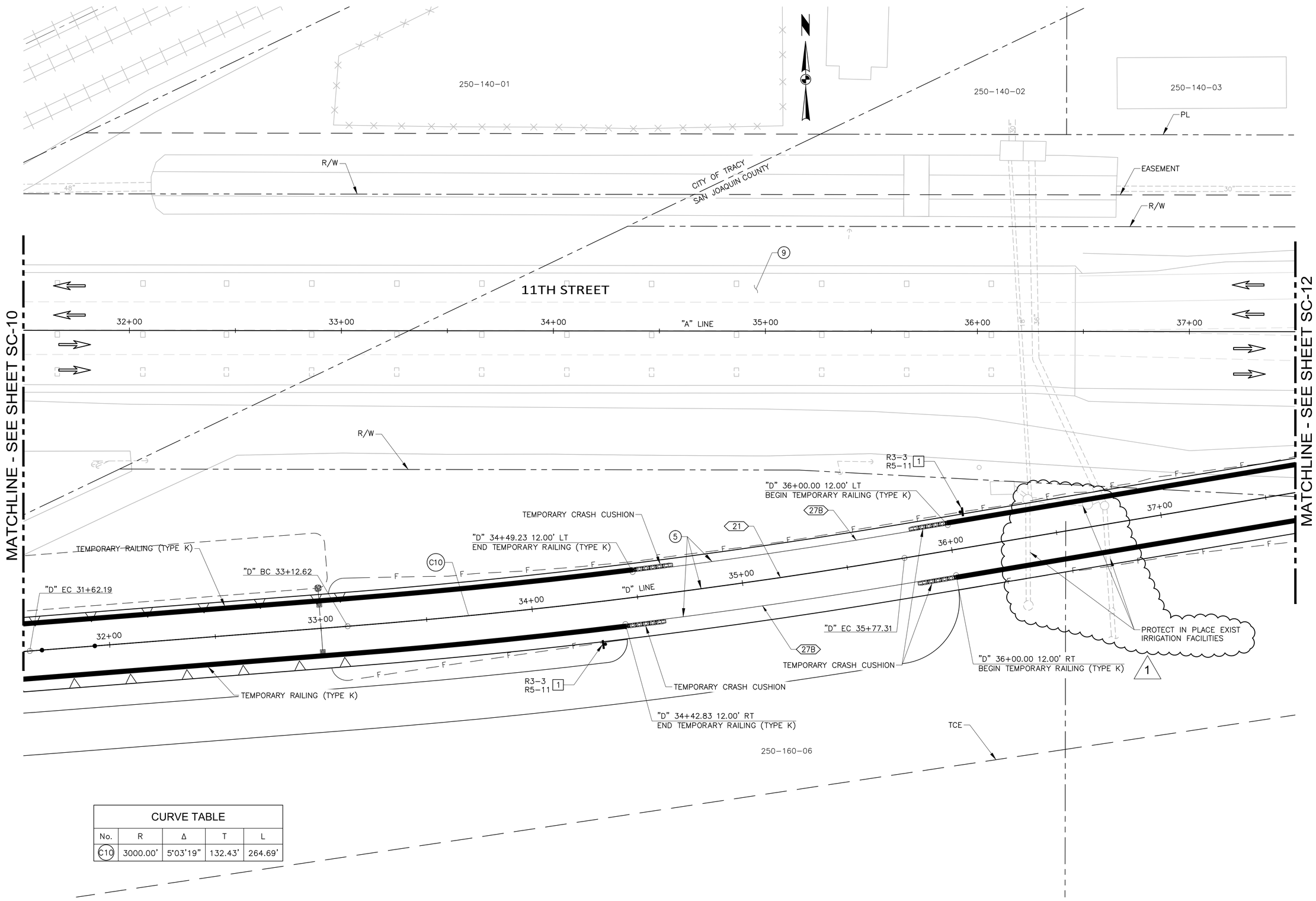

CURVE TABLE				
No.	R	Δ	T	L
C10	3000.00'	5°03'19"	132.43'	264.69'

THIS PLAN ACCURATE FOR STAGE CONSTRUCTION AND TRAFFIC HANDLING ONLY

11/06/14
DATE

REGISTERED CIVIL ENGINEER

REGISTERED PROFESSIONAL ENGINEER
MELISSA K McCONNELL
No. 72264
Exp. 06/30/16
CIVIL
STATE OF CALIFORNIA

dh drake haglan
AND ASSOCIATES
11060 White Rock Road, Suite 200
Rancho Cordova, CA 95670

REVISIONS

SYM	DATE	DESCRIPTION	APPROVED
1		REVISED PER ADDENDUM No. 1	

DESIGNED BY M. MCCONNELL
DRAWN BY M. MCCONNELL
CHECKED BY J. SILVA
SCALE 1"=20'

CITY OF TRACY

11th ST EAST TRACY OVERHEAD

STAGE 2 CONSTRUCTION-TRAFFIC HANDLING

SC-11

SHEET 85
OF 260 SHEETS

MATCHLINE - SEE SHEET SC-16

MATCHLINE - SEE SHEET SC-18

250-140-01

250-140-02

250-140-03

PL

R/W

CITY OF TRACY
SAN JOAQUIN COUNTY

EASEMENT

R/W

3 6

6

11TH STREET

32+00 33+00 34+00 "A" LINE 35+00 36+00 37+00

R/W

R3-3
R5-11 1
(PLACED IN
PREVIOUS STAGE)

12'

12'

37+00

36+00

35+00

34+00

"D" LINE

33+00

32+00

CHANNELIZERS
(PLACED IN PREVIOUS STAGE)

12'

12'

R3-3
R5-11 1
(PLACED IN
PREVIOUS STAGE)

TEMPORARY RAILING (TYPE K)
(PLACED IN PREVIOUS STAGE)

TEMPORARY STRIPING
(PLACED IN PREVIOUS STAGE)

PROTECT IN PLACE EXIST
IRRIGATION FACILITIES

1

250-160-06

THIS PLAN ACCURATE FOR STAGE CONSTRUCTION AND TRAFFIC HANDLING ONLY

Melissa K. McConnell
11/06/14
DATE
REGISTERED CIVIL ENGINEER

REGISTERED PROFESSIONAL ENGINEER
MELISSA K. McCONNELL
No. 72264
Exp. 06/30/16
CIVIL
STATE OF CALIFORNIA

dh drakehaglan AND ASSOCIATES
11060 White Rock Road, Suite 200
Rancho Cordova, CA 95670

REVISIONS		
STM	DATE	DESCRIPTION
1		REVISED PER ADDENDUM No. 1

APPROVED

DESIGNED BY	DRAWN BY	CHECKED BY	SCALE
M. MCCONNELL	M. MCCONNELL	J. SILVA	1"=20'

CITY OF TRACY

11th ST EAST TRACY OVERHEAD
STAGE 3 CONSTRUCTION-TRAFFIC HANDLING

SC-17

SHEET 91
OF 260 SHEETS

MATCHLINE - SEE SHEET SC-23

MATCHLINE - SEE SHEET SC-25

UPRR R/W

250-140-01

TCE

R/W

CITY OF TRACY
SAN JOAQUIN COUNTY

250-140-02

250-140-03

PL

EASEMENT

R/W

48"

30"

F

11TH STREET

32+00

33+00

34+00

"A" LINE

35+00

36+00

37+00

UPRR R/W

R/W

TEMPORARY CRASH CUSHION
(PLACED IN PREVIOUS STAGE)

TEMPORARY STRIPING
(PLACED IN PREVIOUS STAGE)

R3-3
R5-11 [1]
(PLACED IN
PREVIOUS STAGE)

12'

12'

37+00

36+00

35+00

34+00

"D" LINE

33+00

32+00

CHANNELIZERS
(PLACED IN PREVIOUS STAGE)

TEMPORARY RAILING (TYPE K)
(PLACED IN PREVIOUS STAGE)

PROTECT IN PLACE EXIST
IRRIGATION FACILITIES

TEMP CRASH CUSHION
(PLACED IN PREVIOUS STAGE)

R3-3
R5-11 [1]
(PLACED IN
PREVIOUS STAGE)

TEMPORARY CRASH CUSHION
(PLACED IN PREVIOUS STAGE)

TEMPORARY RAILING (TYPE K)
(PLACED IN PREVIOUS STAGE)

1

250-160-06

TCE

THIS PLAN ACCURATE FOR STAGE CONSTRUCTION AND TRAFFIC HANDLING ONLY

11/06/14
DATE

REGISTERED CIVIL ENGINEER

REGISTERED PROFESSIONAL ENGINEER
MELISSA K. McCONNELL
No. 72264
Exp. 06/30/16
CIVIL
STATE OF CALIFORNIA

dh drakehaglan AND ASSOCIATES
10080 White Rock Road, Suite 200
Rancho Cordova, CA 95670

REVISIONS			
SYM	DATE	DESCRIPTION	APPROVED
1		REVISED PER ADDENDUM No. 1	

DESIGNED BY M. MCCONNELL
DRAWN BY M. MCCONNELL
CHECKED BY J. SILVA
SCALE 1"=20'

CITY OF TRACY

11th ST EAST TRACY OVERHEAD
STAGE 4 CONSTRUCTION-TRAFFIC HANDLING

SC-24

SHEET 98
OF 260 SHEETS

MATCHLINE - SEE SHEET SC-30

MATCHLINE - SEE SHEET SC-32

250-140-01

250-140-02

250-140-03

TCE

PL

R/W

PCC CHANNEL LINING

CITY OF TRACY
SAN JOAQUIN COUNTY

EASEMENT

48"

30"

F

11TH STREET

32+00

33+00

34+00

"A" LINE

35+00

36+00

37+00

A FINAL PERMANENT STRIPING

7

2

"D" LINE

PROTECT IN PLACE EXIST IRRIGATION FACILITIES

1

250-160-06

TCE

THIS PLAN ACCURATE FOR STAGE CONSTRUCTION AND TRAFFIC HANDLING ONLY

11/06/14
DATE

REGISTERED CIVIL ENGINEER

REGISTERED PROFESSIONAL ENGINEER
NEELESH K. MCCONNELL
No. 72264
Exp. 06/30/16
CIVIL
STATE OF CALIFORNIA

dh drakehaglan
AND ASSOCIATES
10080 White Rock Road, Suite 200
Rancho Cordova, CA 95670

REVISIONS

STM	DATE	DESCRIPTION	APPROVED
1		REVISED PER ADDENDUM No. 1	

DESIGNED BY M. MCCONNELL
DRAWN BY M. MCCONNELL
CHECKED BY J. SILVA
SCALE 1"=20'

CITY OF TRACY

11th ST EAST TRACY OVERHEAD

STAGE 5 CONSTRUCTION-TRAFFIC HANDLING

SC-31

SHEET 105
OF 260 SHEETS

MATCHLINE - SEE SHEET SC-37

MATCHLINE - SEE SHEET SC-39

250-140-01

250-140-02

250-140-03

PL

R/W

CITY OF TRACY
SAN JOAQUIN COUNTY

EASEMENT

R/W

11TH STREET

32+00 33+00 34+00 "A" LINE 35+00 36+00 37+00

R/W

250-160-06

1

THIS PLAN ACCURATE FOR STAGE CONSTRUCTION AND TRAFFIC HANDLING ONLY

11/06/14
DATE

REGISTERED CIVIL ENGINEER

REGISTERED PROFESSIONAL ENGINEER
MELISSA K. McCONNELL
No. 72264
Exp. 06/30/16
CIVIL
STATE OF CALIFORNIA

dh drakehaglan
AND ASSOCIATES
11060 White Rock Road, Suite 200
Rancho Cordova, CA 95670

REVISIONS

SYM	DATE	DESCRIPTION
1		REVISED PER ADDENDUM No. 1

APPROVED

DESIGNED BY M. MCCONNELL
DRAWN BY M. MCCONNELL
CHECKED BY J. SILVA
SCALE 1"=20'

CITY OF TRACY

11th ST EAST TRACY OVERHEAD

STAGE 6 CONSTRUCTION-TRAFFIC HANDLING

SC-38

SHEET 112
OF 260 SHEETS

CONSTRUCTION NOTE:

(1) APPROXIMATE LOCATION OF TEMPORARY RETENTION BASIN. MINIMUM REQUIRED VOLUME = 28,000 CUBIC FEET.

CITY OF TRACY
SAN JOAQUIN COUNTY

UPRR R/W

TCE

R/W

EASEMENT

R/W

48"

30"

32+00 "A" LINE 33+00 34+00 11TH STREET 35+00 36+00 37+00

18" 36"

MATCHLINE - SEE SHEET DE-4

MATCHLINE - SEE SHEET DE-6

Exist ACCESS ROAD

SETTLEMENT MONITORING POINT

UPRR R/W

EP AND RETAINING WALL

TEMPORARY RAILING (TYPE K)

TEMPORARY DETOUR DRAINAGE

"D" 33+12.62 16.00' LT
END RETAINING WALL
END PROTECTIVE RAILING (DETOUR)

"D" 34+49.23 14.00' LT
END TEMPORARY RAILING (TYPE K) TAPER AND PROVIDE CRASH CUSHION

"D" 36+00.00 14.00' LT
BEGIN TEMPORARY RAILING (TYPE K) TAPER AND PROVIDE CRASH CUSHION

EXISTING IRRIGATION SYSTEM (PROTECT IN PLACE)

EC 31+62.19

ETW

EC 35+77.31

N85° 52' 02"E 150.43'

N80° 48' 43"E 615.41'

BC 33+12.62

"D" LINE

"D" EC 31+62.19
29.00' RT

"D" 33+12.56 19.00' RT
END RETAINING WALL
END PEDESTRIAN RAILING (DETOUR)

"D" EC 34+42.83
19.00' RT

"D" 34+42.83 14.00' RT
END TEMPORARY RAILING (TYPE K) TAPER AND PROVIDE CRASH CUSHION

"D" EC 36+00.00
19.00' RT

"D" PCC 35+70.05
49.00' RT

"D" 36+00.00 14.00' RT
BEGIN TEMPORARY RAILING (TYPE K) TAPER AND PROVIDE CRASH CUSHION

"D" BC 33+12.62
29.00' RT

"D" PCC 34+32.89
29.00' RT

"D" EC 31+62.19
49.00' RT

"D" BC 33+12.62
49.00' RT

BOW AND RETAINING WALL

LIMITS OF TEMPORARY ACCESS ROAD, CONSTRUCT WITH 6" CLASS 2 AB PER THE SPECIFICATIONS

TCE

PL

20' MIN.

20'

12' 12' 5' 5'

27B 21 C3 C7 C8 C9 C10 a b c d e 1

SETTLEMENT MONITORING POINT LOCATION TABLE	
STATION	OFFSET (FT)
31+75.00 @ "D" LINE	0.00

CURVE TABLE				
No.	R	Δ	T	L
C3	3000.00'	5°03'19"	132.43'	264.69'

CURVE TABLE				
No.	R	Δ	T	L
C7	3029.00'	2°17'49"	60.72'	121.43'
C8	3049.00'	4°54'59"	130.90'	261.63'
C9	10.00'	90°11'23"	10.03'	15.74'
C10	30.00'	90°07'19"	30.06'	47.19'

11/06/14
DATE

Melissa K. McConnell
REGISTERED CIVIL ENGINEER

REGISTERED PROFESSIONAL ENGINEER
MELISSA K. McCONNELL
No. 72264
Exp. 06/30/16
CIVIL
STATE OF CALIFORNIA

dh drakehaglan AND ASSOCIATES
10060 White Rock Road, Suite 200
Rancho Cordova, CA 95670

REVISIONS			
STN	DATE	DESCRIPTION	APPROVED
1		REVISED PER ADDENDUM No. 1	

DESIGNED BY M. MCCONNELL
DRAWN BY M. MCCONNELL
CHECKED BY J. SILVA
SCALE 1"=20'

CITY OF TRACY

11th ST EAST TRACY OVERHEAD
DETOUR LAYOUT

DE-5

SHEET 124
OF 260 SHEETS

GENERAL NOTES

LOAD & RESISTANCE FACTOR DESIGN:

DESIGN: AASHTO LRFD BRIDGE DESIGN SPECIFICATIONS, 4th EDITION
WITH CALIFORNIA AMENDMENTS, PREFACE DATE NOVEMBER 2011

EXCEPT THAT CORROSION IS BASED ON USING STRUCTURE BACKFILL
SPECIFIED IN AASHTO LFRD BRIDGE DESIGN SPECIFICATIONS, 4TH EDITION

1

LIVE LOAD: VERTICAL SURCHARGE = 240 lb/ft^2

SOIL PARAMETERS:

INTERNAL DESIGN $\Phi = 34°$, $\gamma = 120$ lb/ft^3

EXTERNAL DESIGN Φ (RETAINED BACKFILL) = 30°, $\gamma = 120$ lb/ft^3
Φ (FOUNDATION) = 28°, c=200 psf, $\gamma = 130$ lb/ft^3
Kh = 0.23
PGA = 0.465g

PRECAST CONCRETE PANELS:

f'c = 4,000 psi (CONCRETE COMPRESSIVE STRENGTH AT 28 DAYS)
fy = 60,000 psi (YIELD STRENGTH OF REINFORCEMENT)

1

SOIL REINFORCEMENT:

SOIL REINFORCEMENT: ASTM A-572 GRADE 65
CORROSION RATE = LOSS OF GALVANIZING: 0.58 MIL/YEAR FOR FIRST 2 YEARS
0.16 MIL/YEAR FOR SUBSEQUENT YEARS
LOSS OF CARBON STEEL: 0.47 MIL/YEAR AFTER ZINC DEPLETION
CONNECTION BOLTS MUST BE ASTM A449
TIE STRIPS MUST MUST BE ASTM A-1011 GRADE 50
ALL SOIL REINFORCEMENT, CONNECTIONS, AND BOLTS MUST BE GALVANIZED

REINFORCED CONCRETE:

f'c = 3,600 psi, EXCEPT AS NOTED
(CONCRETE COMPRESSIVE STRENGTH AT 28 DAYS)
fy = 60,000 psi (YIELD STRENGTH OF REINFORCEMENT)

STANDARD PLANS DATED 2010

	A10A	ABBREVIATIONS (SHEET 1 OF 2)
RSP	A10B	ABBREVIATIONS (SHEET 2 OF 2)
	A10C	LINES AND SYMBOLS (SHEET 1 OF 3)
	A10D	LINES AND SYMBOLS (SHEET 2 OF 3)
	A10E	LINES AND SYMBOLS (SHEET 3 OF 3)
	B0-3	BRIDGE DETAILS
RSP	B3-4A	RETAINING WALL TYPE 5 (CASE 1)
	B3-6	RETAINING WALL DETAILS NO. 2
	B6-21	JOINT SEALS (MAXIMUM MOVEMENT RATING = 2")
RSP	B11-47	CABLE RAILING
RSP	B11-55	CONCRETE BARRIER TYPE 732

MSE WALL NOTES:

1. DESIGN OF MSE WALLS MUST BE DESIGNED AND CONSTRUCTED IN CONFORMANCE WITH AASHTO LRFD BRIDGE SPECIFICATIONS, FOURTH EDITION, 2007 WITH 2008 INTERIMS AND LATEST CALTRANS AMENDMENTS TO THE FOURTH ADDITION. WALLS AT ACUTE CORNERS SHALL BE DESIGNED AS BIN WALLS FOR THE EXTENT OF THE WALL WHERE FULL LENGTH OF REINFORCEMENT CANNOT BE INSTALLED WITHOUT ENCOUNTERING THE OPPOSITE WALL FACE. SLIP JOINTS MUST BE PROVIDED AT THE INTERFACE OF THE ACUTE CORNER AND AFTER THE LAST COLUMN OF PANELS WHERE FULL LENGTH REINFORCEMENTS CAN BE PLACED AT A MINIMUM. AS PART OF THE SHOP DRAWING SUBMITTAL, THE CONTRACTOR MUST CLEARLY INDICATE LOCATION OF SLIP JOINTS AND PROVIDE CALCULATIONS SHOWING PROPOSED SLIP JOINT LOCATIONS ARE CAPABLE OF HANDLING ANTICIPATED DIFFERENTIAL SETTLEMENT AND APPLIED LOADS.
2. CONTRACTOR MUST SUBMIT PROJECT INFORMATION ON AT LEAST THREE PREVIOUS, SIMILAR AND SUCCESSFULLY PERFORMING APPLICATIONS OF THE SPECIFIC WALL SYSTEM PROPOSED, DESIGNED AND CONSTRUCTED IN ACCORDANCE WITH THE REQUIREMENTS OF THIS PROJECT. AT A MINIMUM, THE CONTRACTOR/MSE WALL MANUFACTURER MUST SUBMIT PERTINENT PROJECTS THAT HAVE WALLS GREATER THAN 30' TALL, TIERED WALLS OF SIMILAR HEIGHT AND PROJECTS THAT HAVE HAD ACUTE CORNERS LESS THAN 60 DEGREES. CONTRACTOR/MSE MANUFACTURER NOT MEETING THESE REQUIREMENTS WILL BE DEEMED NON-RESPONSIVE. THE WALL MANUFACTURER MUST BE LISTED IN GOOD STANDING ON THE CALTRANS PRE-APPROVED ALTERNATIVE EARTH RETAINING SYSTEMS LIST.
3. THE CONTRACTOR MUST SUBMIT WALL DESIGN CALCULATIONS, REPRESENTATIVE CONSTRUCTION DETAILS AND NOTES CONFORMING TO THE PROJECT REQUIREMENTS, SIGNED AND SEALED BY A PROFESSIONAL ENGINEER DIRECTLY EMPLOYED BY THE WALL SYSTEM SUPPLIER AND LICENSED IN THE STATE OF CALIFORNIA, WHO IS QUALIFIED AND EXPERIENCED IN DESIGNS OF THIS TYPE FOR APPROVAL. THE STRAP LENGTHS AND DETAILS SHOWIN IN THESE PLANS ARE FOR BIDDING PURPOSES ONLY. THE CONTRACTOR IS RESPONSIBLE FOR PREPARING AND SUBMITTING THE DESIGN CALCULATIONS AND DETAILS FOR APPROVAL.
4. IF THE WALL CONSTRUCTION IS FOUND TO BE INCONSISTENT WITH THE DESIGN AND DETAILING PROVIDED FOR THE PROPOSED WALL INCLUDING ACUTE CORNERS, THEN THE CONTRACTOR MUST RESUBMIT REPRESENTATIVE DESIGN CALCULATIONS, DATA AND DETAILS FOR REVIEW AND APPROVAL BY THE ENGINEER PRIOR TO ANY FURTHER CONSTRUCTION IN THE AFFECTED AREA.
5. MSE WALL DIMENSIONS, STATIONS, AND OFFSETS ARE MEASURED ALONG THE FRONT FACE OF MSE WALL.
6. COPING DETAILS MAY EITHER BE CAST-IN-PLACE OR PRECAST.
7. PERMANENT MSE WALLS MUST BE DESIGNED FOR A 75-YEAR SERVICE LIFE. TEMPORARY MSE WALLS MUST BE DESIGNED FOR A 5-YEAR SERVICE LIFE.
8. MSE WALLS MUST BE CONSTRUCTED IN ACCORDANCE WITH RELEVANT CALTRANS 2010 STANDARD SPECIFICATIONS AND SPECIAL PROVISIONS INCLUDING MOST RECENT REVISIONS.
9. AN EXTERNAL GLOBAL STABILITY HAS BEEN PERFORMED BASED UPON THE STRIP LENGTHS AND TYPES SHOWN IN THESE PLANS. ALTHOUGH A PRELIMINARY DESIGN OF THE ACUTE CORNERS HAS BEEN PERFORMED, THE CONTRACTOR IS RESPONSIBLE FOR THE DESIGN OF THE ACUTE CORNERS. THE CONTRACTOR MAY SUBMIT ALTERNATIVE SOIL REINFORCEMENT TYPE AND LENGTHS FOR THE WALLS AND ACUTE CORNER CONNECTIONS BASED UPON CALCULATIONS REQUIRED TO BE SUBMITTED. IF THE SOIL REINFORCING LENGTHS ARE MODIFIED, THE CONTRACTOR MUST ENSURE THE EXTERNAL STABILITY AND BEARING CAPACITIES ARE ADEQUATE.
10. FOR AESTHETIC DETAILS, SEE "MSE WALL DETAILS NO. 13" AND "MSE WALL DETAILS NO. 14" SHEETS.
11. CONTRACTOR IS RESPONSIBLE FOR COORDINATING MSE WALL DETAILS WITH LIGHTING AND ELECTRICAL, UTILITY AND ROADWAY PLANS.
12. FOR SURVEY BENCHMARK INFORMATION, SEE "KEY MAP/SURVEY CONTROL" SHEET.
13. PANELS MUST BE SQUARE OR RECTANGULAR. MODULAR BLOCK WALLS AND BATTERED WALLS ARE NOT ALLOWED.
14. THE CONTRACTOR IS RESPONSIBLE FOR DESIGNING AND TESTING CONCRETE PANELS AND CONNECTIONS IF PANELS AND CONNECTIONS ARE NOT ON CALTRANS APPROVED LIST.

ABBREVIATIONS:

MSE = MECHANICALLY STABILIZED EMBANKMENT

H = DESIGN HEIGHT

11/06/14
DATE

REGISTERED CIVIL ENGINEER

REGISTERED PROFESSIONAL ENGINEER
KEVIN J ROSS
No. C49652
Exp. 09/30/16
CIVIL
STATE OF CALIFORNIA

dh drakehaglan
AND ASSOCIATES
11060 White Rock Road, Suite 200
Rancho Cordova, CA 95670

REVISIONS			APPROVED
SYM	DATE	DESCRIPTION	
1		REVISED PER ADDENDUM No. 1	

DESIGNED BY	DRAWN BY	CHECKED BY	SCALE
K. ROSS	K. DRESBACH	M. BURGARD	NO SCALE

CITY OF TRACY

11th ST EAST TRACY OVERHEAD

DESIGN NOTES

R-2

SHEET 158
OF 260 SHEETS

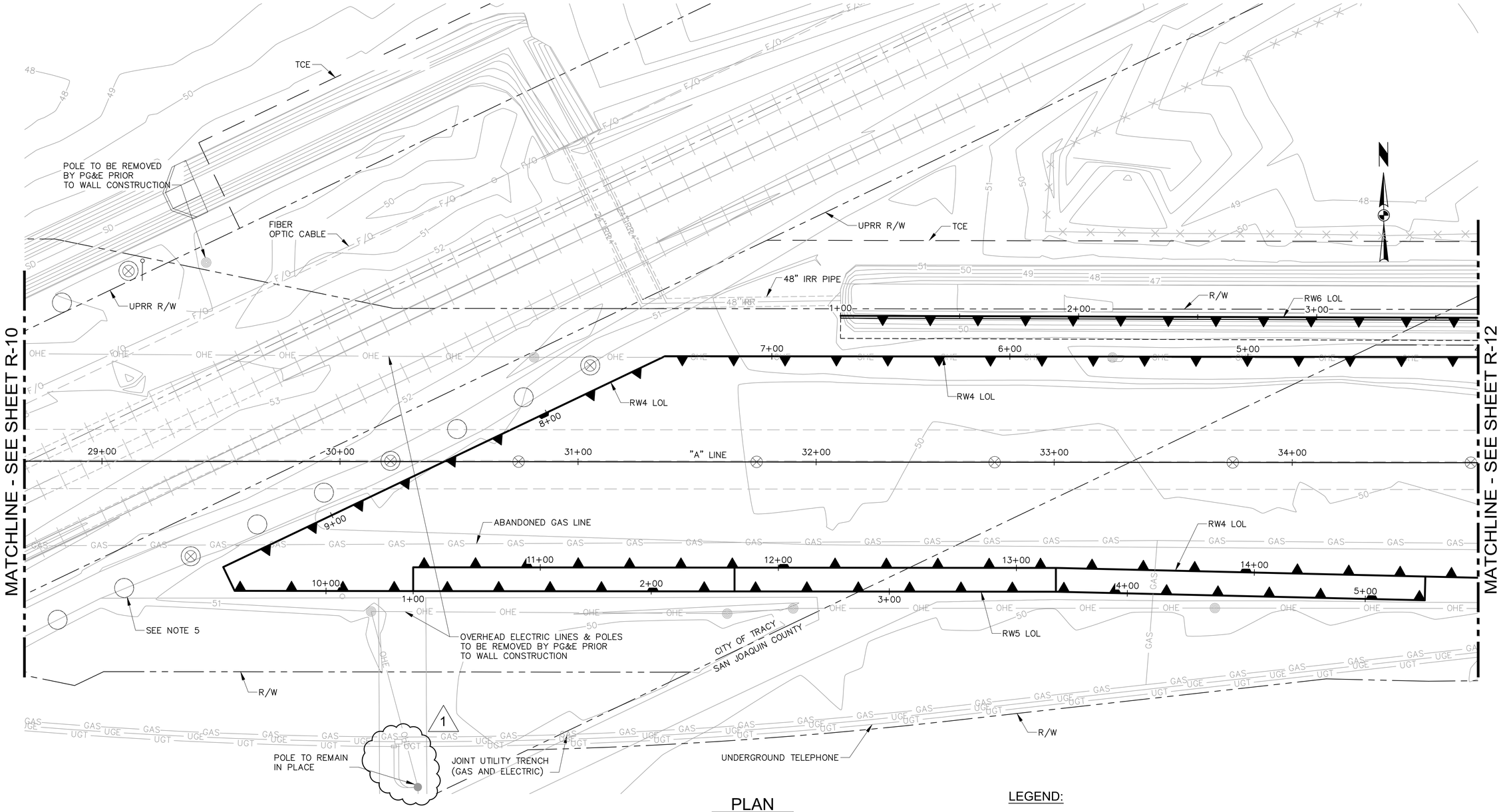

PLAN
SCALE: 1" = 20'

SETTLEMENT MONITORING POINT LOCATION TABLE

STATION	OFFSET (FT)
29+11.05 @ "A" Line	80.06 Left
29+37.31 @ "A" Line	39.88 Right
30+21.18 @ "A" Line	0.30 Left
30+75.00 @ "A" Line	0.00
31+05.05 @ "A" Line	40.47 Left
31+75.00 @ "A" Line	0.00
32+75.00 @ "A" Line	0.00
33+75.00 @ "A" Line	0.00
34+75.00 @ "A" Line	0.00

LEGEND:

⊗ INDICATES SETTLEMENT MONITORING POINT.

NOTES:

1. SEE "UTILITY RELOCATION STAGING PLAN", "DRAINAGE PLAN" AND "SEWER AND WATER PLAN" SHEETS FOR TYPE AND LOCATION OF PROPOSED UTILITIES.
2. LOCATION OF EXISTING UTILITIES SHOWN ARE APPROXIMATE. THE CONTRACTOR MUST VERIFY LOCATIONS OF ALL AFFECTED UTILITIES PRIOR TO PERFORMING ANY EXCAVATION.
3. ALL UTILITIES MUST BE PROTECTED IN PLACE UNLESS OTHERWISE NOTED AS ABANDONED.
4. STORM DRAINAGE SYSTEMS MUST BE CONSTRUCTED PRIOR TO MSE WALL CONSTRUCTION.
5. PROPOSED PILES TO BE INSTALLED AFTER APPROACH FILL SETTLEMENT IS COMPLETE.

11/06/14
DATE
REGISTERED CIVIL ENGINEER

REGISTERED PROFESSIONAL ENGINEER
KEVIN J ROSS
No. C49652
Exp. 09/30/16
CIVIL
STATE OF CALIFORNIA

dh drakehaglan AND ASSOCIATES
11060 White Rock Road, Suite 200
Rancho Cordova, CA 95670

REVISIONS			
SYM	DATE	DESCRIPTION	APPROVED
1		REVISED PER ADDENDUM No. 1	

DESIGNED BY	K. ROSS	CHECKED BY	M. BURGARD
DRAWN BY	K. DRESBACH	SCALE	AS SHOWN

CITY OF TRACY

11th ST EAST TRACY OVERHEAD
RETAINING WALLS NO. 4, NO. 5 & NO. 6 FOUNDATION PLAN

R-11

SHEET 167
OF 260 SHEETS

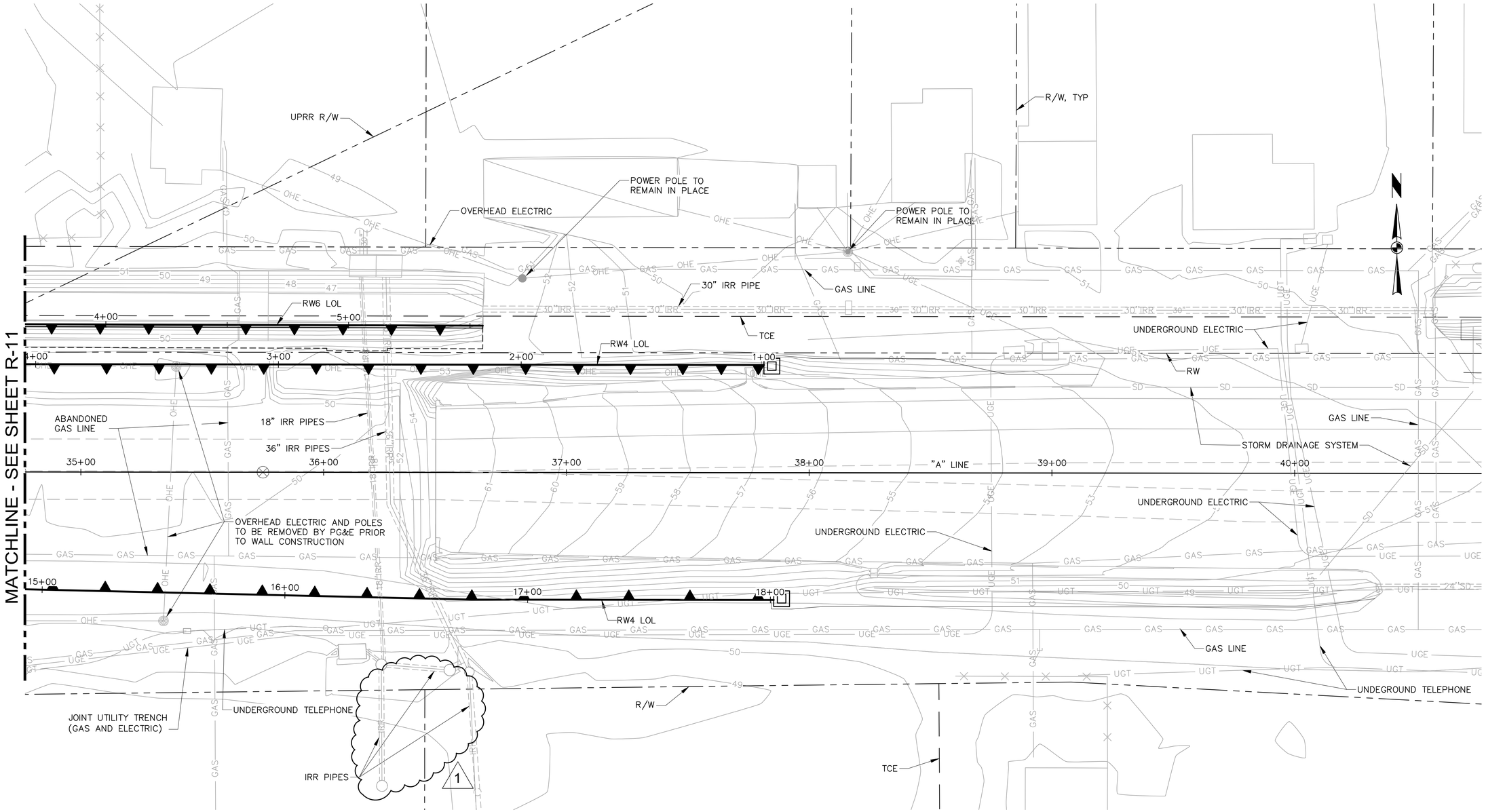

PLAN
SCALE: 1" = 20'

SETTLEMENT MONITORING POINT LOCATION TABLE

STATION	OFFSET (FT)
35+75.00 @ "A" Line	0.00

LEGEND:

⊗ INDICATES SETTLEMENT MONITORING POINT

NOTES:

1. SEE "UTILITY RELOCATION STAGING PLAN", "DRAINAGE PLAN" AND "SEWER & WATER PLAN" SHEETS FOR TYPE AND LOCATION OF PROPOSED UTILITIES.
2. LOCATION OF EXISTING UTILITIES SHOWN ARE APPROXIMATE. THE CONTRACTOR MUST VERIFY LOCATIONS OF ALL AFFECTED UTILITIES PRIOR TO PERFORMING ANY EXCAVATION.
3. ALL UTILITIES MUST BE PROTECTED IN PLACE UNLESS OTHERWISE NOTED AS ABANDONED.

11/06/14 DATE
REGISTERED CIVIL ENGINEER

REGISTERED PROFESSIONAL ENGINEER KEVIN J ROSS No. C49652 Exp. 09/30/16 CIVIL STATE OF CALIFORNIA

dh drakehaglan AND ASSOCIATES
11060 White Rock Road, Suite 200
Rancho Cordova, CA 95670

REVISIONS			
SYM	DATE	DESCRIPTION	APPROVED
1		REVISED PER ADDENDUM No. 1	

DESIGNED BY	DRAWN BY	CHECKED BY	SCALE
K. ROSS	K. DRESBACH	M. BURGARD	AS SHOWN

CITY OF TRACY

11th ST EAST TRACY OVERHEAD

RETAINING WALLS NO. 4 & NO. 6 FOUNDATION PLAN

R-12

SHEET 168
OF 260 SHEETS

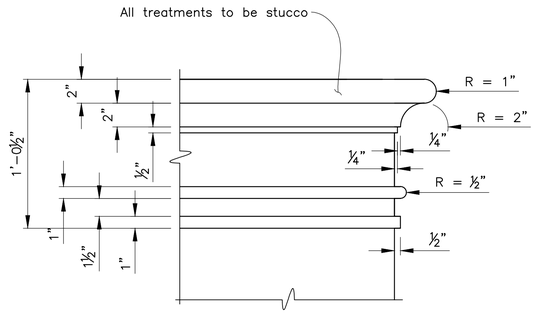

DETAIL 1
SCALE: 2"=1'-0"

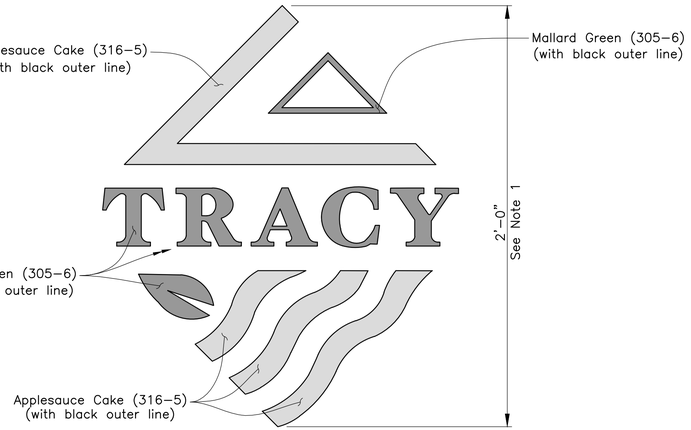

LOGO 2 DETAIL
SCALE: 3"=1'-0"

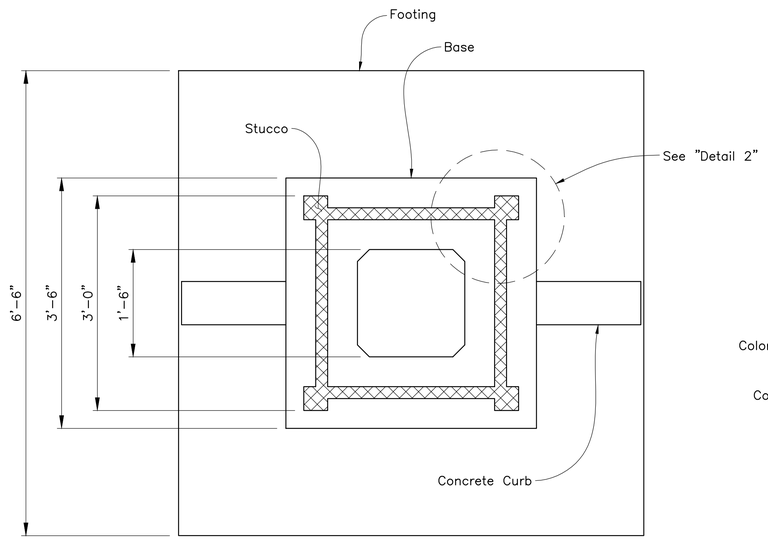

SECTION A-A
SCALE: 1"=1'-0"

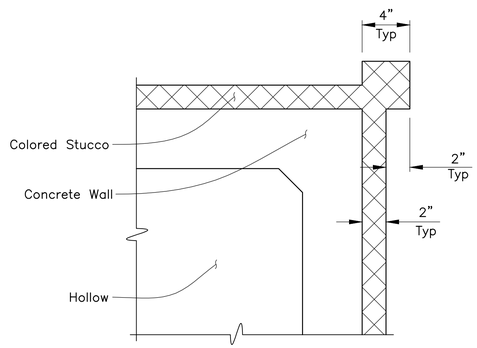

DETAIL 2
SCALE: 2"=1'-0"

1

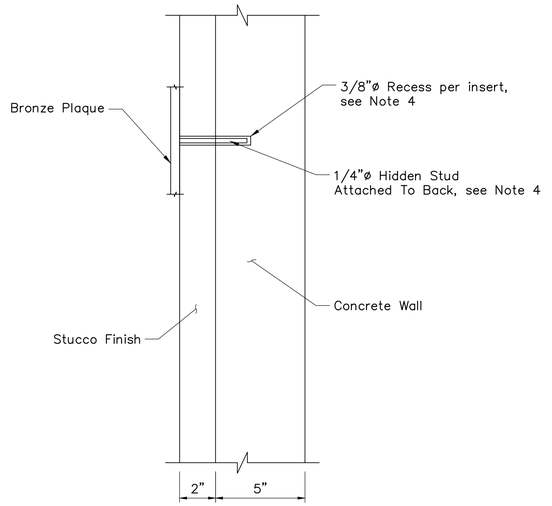

CONCEPTUAL BRONZE PLAQUE ATTACHMENT DETAIL
SCALE: 3"=1'-0"

NOTES:

1. Logo 2 information to be supplied electronically by City for fabrication and installation by Contractor. Logo to be ½" thick urethane with flat, raised, beveled edges. Logo to be centered in monument stem. Logo shall be 2'-0" tall and maintain aspect ratio of electronic logo provided by the City.
2. All colored logos, lettering, concrete, and stucco must be painted. Paint shall be Pittsburgh Paints colors indicated or approved equal.
3. All stucco must have a smooth trowel finish.
4. Conceptual attachment detail for bronze plaque shown. Anchoring system must extend into concrete wall. Studs must be anchored into recesses with epoxy per manufacturer details. Contractor to submit actual method and details for adhering bronze plaque to Engineer for authorization.

11/06/14
DATE

REGISTERED CIVIL ENGINEER

REGISTERED PROFESSIONAL ENGINEER
JEFF S. ELMENSDORP
No. C66309
Exp. 06/30/16
CIVIL
STATE OF CALIFORNIA

dh drakehaglan AND ASSOCIATES
11060 White Rock Road, Suite 200
Rancho Cordova, CA 95670

SYM	DATE	REVISIONS DESCRIPTION	APPROVED
1		REVISED PER ADDENDUM No. 1	

DESIGNED BY M. BURGARD
DRAWN BY A. HYDE
CHECKED BY J. ELMENSDORP
SCALE AS SHOWN

CITY OF TRACY

11th ST EAST TRACY OVERHEAD

ENTRY MONUMENT AESTHETIC DETAILS NO. 2

A-8

SHEET 207
OF 260 SHEETS

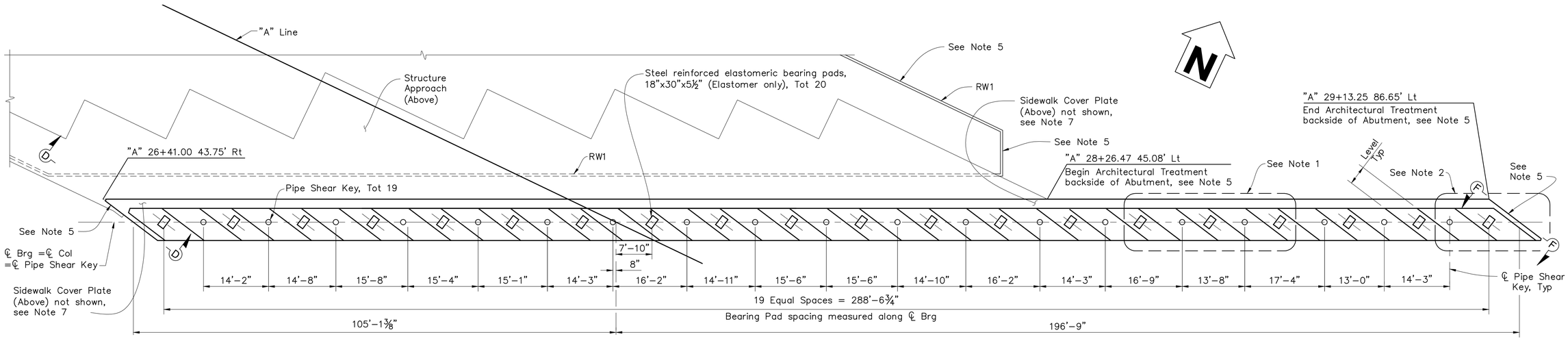

ABUTMENT 1 LAYOUT

SCALE: 3/32"=1'-0"

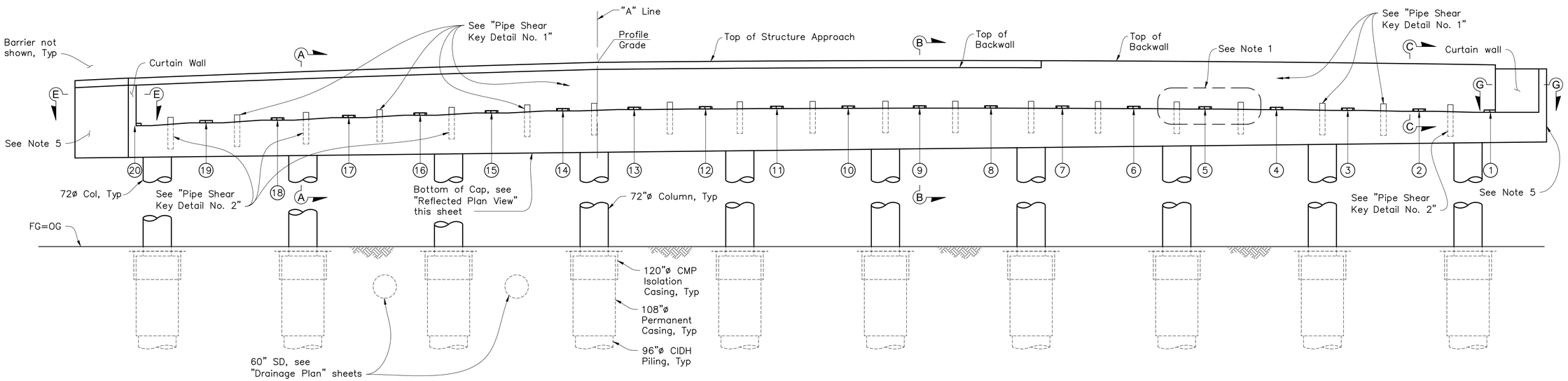

ABUTMENT 1 ELEVATION

SCALE: 3/32"=1'-0"

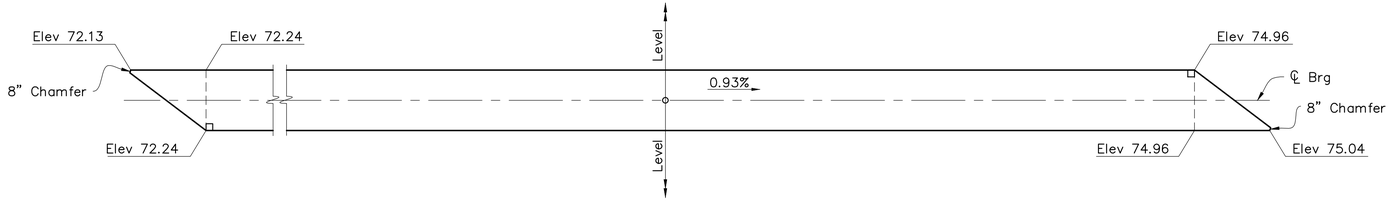

REFLECTED PLAN VIEW (BOTTOM OF ABUTMENT CAP ELEVATIONS)

SCALE: 3/32"=1'-0"

LEGEND:

(1) Indicates Girder Number.

NOTES:

1. For "Typical Abutment Seat" details, see "Abutment Layout Details" sheet.
2. For "Typical Edge Abutment Detail", see "Abutment Layout Details" sheet.
3. For Sections "A-A", "B-B" and "C-C", see "Abutment Details No. 3" sheet.
4. For Sections "D-D", "E-E", "F-F" and "G-G", see "Abutment Details No. 5" sheet.
5. For Architectural Treatment on MSE Walls, see "MSE Wall Details No. 13" and "MSE Wall Details No. 14" sheets. For Architectural Treatment on abutment and curtain walls, see "Aesthetic Details No. 3" sheet.
6. For "Pipe Shear Key Detail No. 1" and "Pipe Shear Key Detail No. 2", see "Abutment Details No. 4" sheet.
7. For "Sidewalk Cover Plate", see "Structure Approach Details No. 1" sheet.

11/06/14 DATE

REGISTERED CIVIL ENGINEER

REGISTERED PROFESSIONAL ENGINEER JEFF B. ELMENDORP No. 066309 Exp. 06/30/16 CIVIL STATE OF CALIFORNIA

dh drakehaglan AND ASSOCIATES
1060 White Rock Road, Suite 200
Rancho Cordova, CA 95670

SYM	DATE	REVISIONS DESCRIPTION	APPROVED
1		REVISED PER ADDENDUM No. 1	

DESIGNED BY	DRAWN BY	CHECKED BY	SCALE
R. BAUTISTA	A. BARBA	S. JOHNSON	AS SHOWN

CITY OF TRACY

11th ST EAST TRACY OVERHEAD
ABUTMENT 1 LAYOUT

S-7

SHEET 215 OF 260 SHEETS

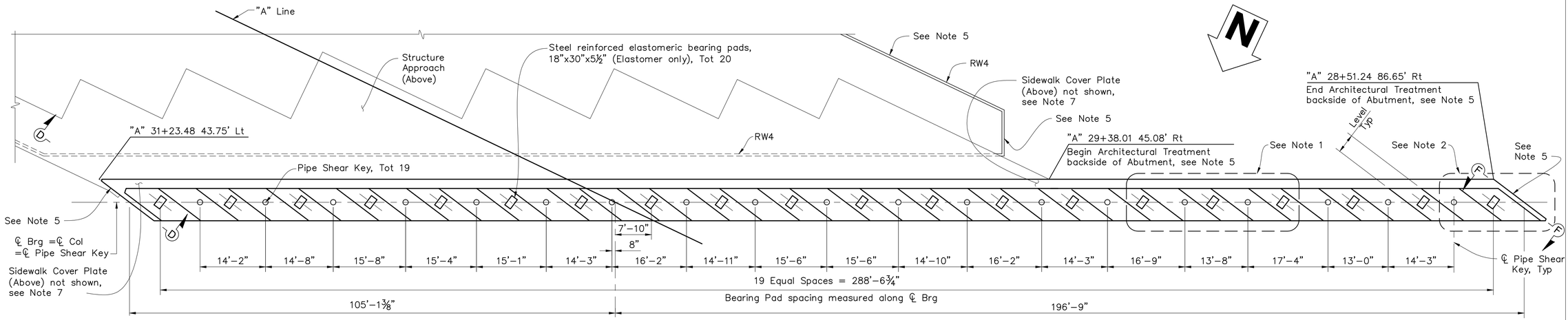

ABUTMENT 2 LAYOUT

SCALE: 3/32"=1'-0"

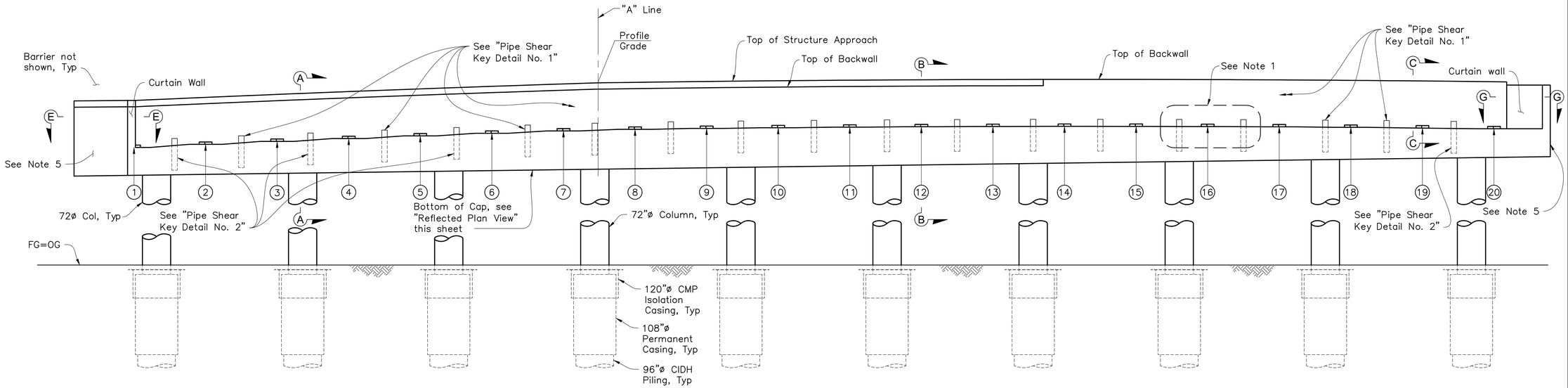

ABUTMENT 2 ELEVATION

SCALE: 3/32"=1'-0"

REFLECTED PLAN VIEW (BOTTOM OF ABUTMENT CAP ELEVATIONS)

SCALE: 3/32"=1'-0"

LEGEND:

(1) Indicates Girder Number.

NOTES:

1. For "Typical Abutment Seat" details, see "Abutment Layout Details" sheet.
2. For "Typical Edge Abutment Detail", see "Abutment Layout Details" sheet.
3. For Sections "A-A", "B-B" and "C-C", see "Abutment Details No. 3" sheet.
4. For Sections "D-D", "E-E", "F-F" and "G-G", see "Abutment Details No. 5" sheet.
5. For Architectural Treatment on MSE Walls, see "MSE Wall Details No. 13" and "MSE Wall Details No. 14" sheets. For Architectural Treatment on abutment and curtain walls see, "Aesthetic Details No. 3" sheet. (1)
6. For "Pipe Shear Key Detail No. 1" and "Pipe Shear Key Detail No. 2", see "Abutment Details No. 4" sheet.
7. For "Sidewalk Cover Plate", see "Structure Approach Details No. 1" sheet.

11/06/14
DATE

REGISTERED CIVIL ENGINEER

REGISTERED PROFESSIONAL ENGINEER
JEFF B. ELMENSDORP
No. 086309
Exp. 06/30/16
CIVIL
STATE OF CALIFORNIA

drakehaglan AND ASSOCIATES
11060 White Rock Road, Suite 200
Rancho Cordova, CA 95670

REVISIONS

SYM	DATE	DESCRIPTION	APPROVED
1		REVISED PER ADDENDUM No. 1	

DESIGNED BY R. BAUTISTA
DRAWN BY A. BARBA
CHECKED BY S. JOHNSON
SCALE AS SHOWN

CITY OF TRACY

11th ST EAST TRACY OVERHEAD
ABUTMENT 2 LAYOUT

S-8

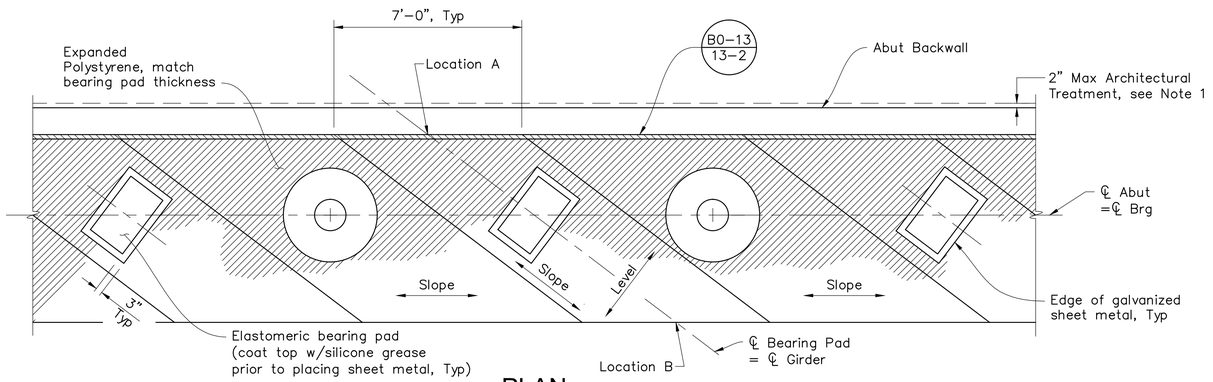

PLAN

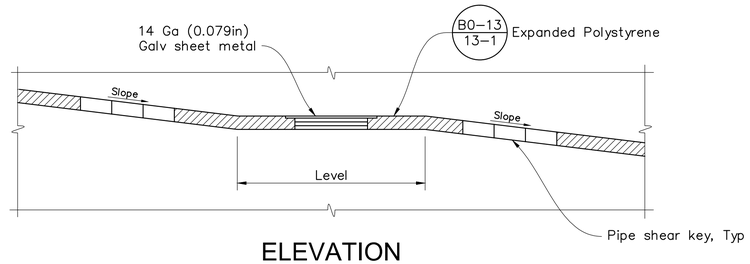

ELEVATION
TYPICAL ABUTMENT SEAT
NO SCALE

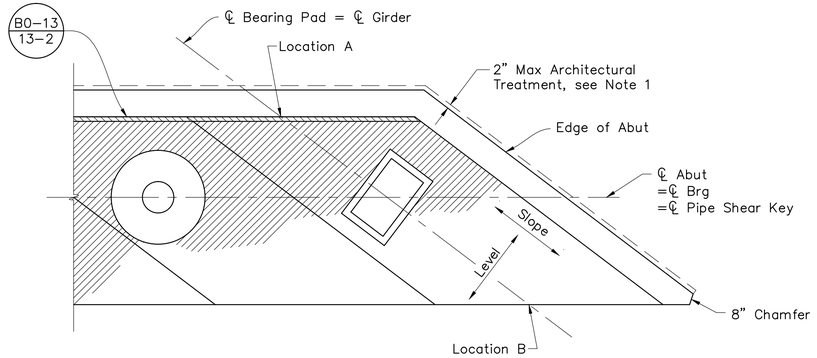

TYPICAL EDGE ABUTMENT DETAIL
SCALE: 3/8"=1'-0"

NOTES:

1. For Architectural Treatment details, see "Aesthetic Details No. 3" sheet.

ABUTMENT SEAT ELEVATION TABLE *						ABUTMENT SEAT ELEVATION TABLE *					
Abutment 1						Abutment 2					
Girder Number	Location A	Location B	Girder Number	Location A	Location B	Girder Number	Location A	Location B	Girder Number	Location A	Location B
(1)	81.28	81.05	(11)	82.00	81.98	(1)	77.25	77.47	(11)	81.64	81.66
(2)	81.49	81.29	(12)	81.90	81.89	(2)	77.92	78.12	(12)	81.74	81.75
(3)	81.67	81.49	(13)	81.77	81.77	(3)	78.57	78.74	(13)	81.80	81.80
(4)	81.82	81.67	(14)	81.48	81.50	(4)	79.18	79.33	(14)	81.83	81.81
(5)	81.93	81.81	(15)	81.03	81.07	(5)	79.76	79.88	(15)	81.84	81.80
(6)	82.02	81.92	(16)	80.54	80.61	(6)	80.31	80.41	(16)	81.82	81.74
(7)	82.07	82.00	(17)	80.01	80.11	(7)	80.83	80.90	(17)	81.76	81.66
(8)	82.10	82.04	(18)	79.46	79.58	(8)	81.18	81.23	(18)	81.67	81.55
(9)	82.09	82.05	(19)	78.88	79.03	(9)	81.36	81.41	(19)	81.55	81.40
(10)	82.06	82.03	(20)	78.26	78.44	(10)	81.52	81.55	(20)	81.40	81.23

* Elevations based on assumed 6.5" total bearing thickness. Seat elevations shown will need to be adjusted based on actual bearing thickness as authorized by the Engineer.

11/06/14
DATE

REGISTERED CIVIL ENGINEER

PROFESSIONAL ENGINEER
REGISTERED
JEFF B. ELMENDORP
No. 066309
Exp. 06/30/16
CIVIL
STATE OF CALIFORNIA

dh drakehaglan AND ASSOCIATES
11060 White Rock Road, Suite 200
Rancho Cordova, CA 95670

REVISIONS			
SYM	DATE	DESCRIPTION	APPROVED
1		REVISED PER ADDENDUM No. 1	

DESIGNED BY	DRAWN BY	CHECKED BY	SCALE
R. BAUTISTA	A. BARBA	S. JOHNSON	AS SHOWN

CITY OF TRACY

11th ST EAST TRACY OVERHEAD
ABUTMENT LAYOUT DETAILS

S-9

SHEET 217
OF 260 SHEETS

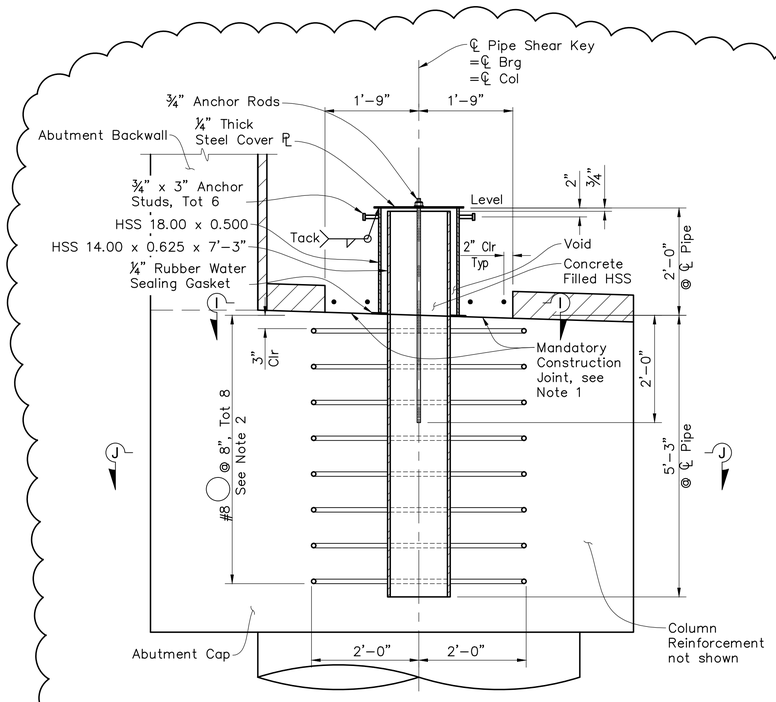

PIPE SHEAR KEY DETAIL NO. 1

SCALE: 3/4"=1'–0"

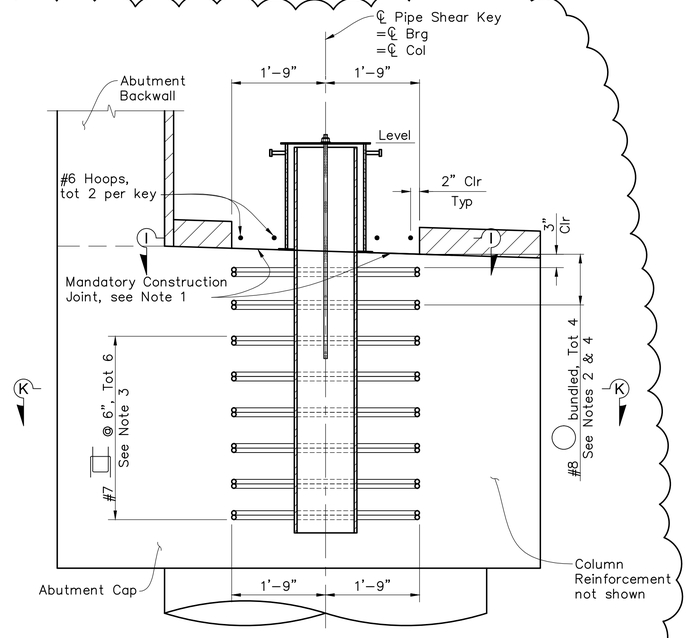

(For details not shown, see "Pipe Shear Key Detail No. 1")

PIPE SHEAR KEY DETAIL NO. 2

SCALE: 3/4"=1'–0"

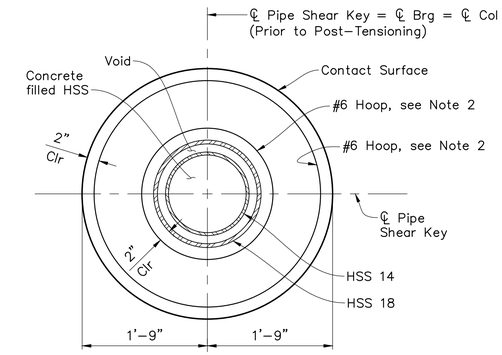

SECTION I-I

SCALE: 1"=1'–0"

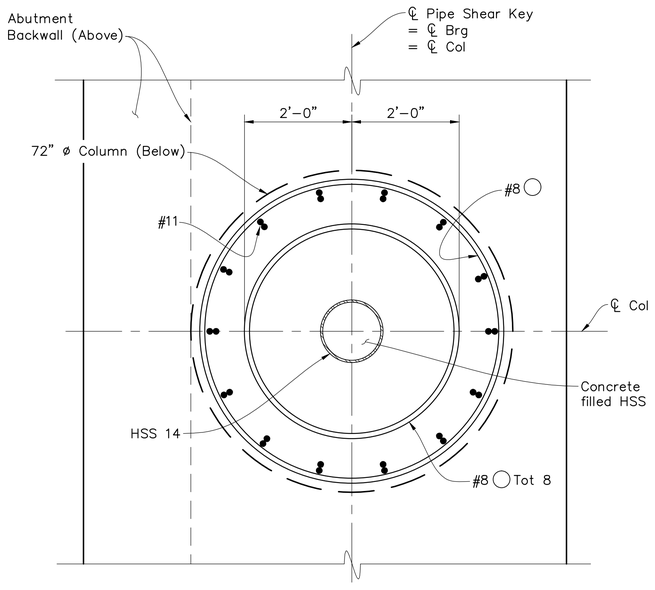

SECTION J-J

SCALE: 3/4"=1'–0"

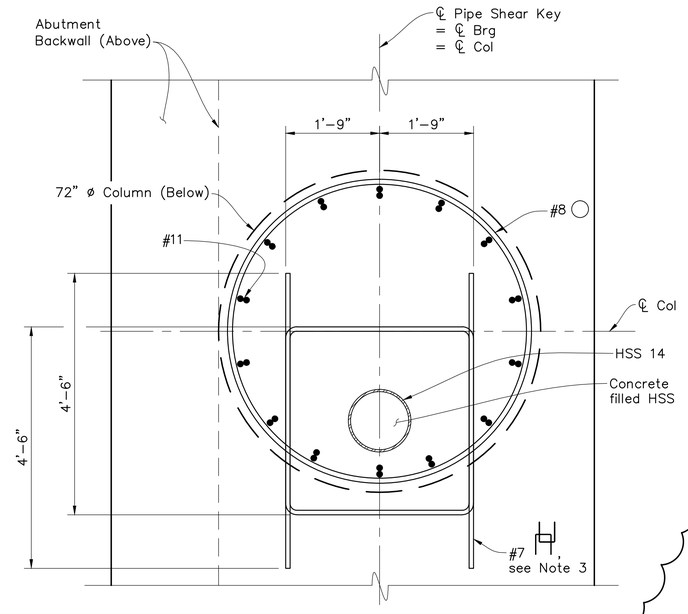

SECTION K-K

SCALE: 3/4"=1'–0"

NOTES:

1. Mandatory Construction Joint surface to be steel trowel–finished smooth and lined with 15 lbs construction paper.
2. All hoops are Ultimate Butt Spliced Continuous.
3. Place #7 ties below abutment seat main longitudinal bars. Adjust placement and spacing to avoid reinforcement conflicts as authorized by the Engineer.
4. Place #8 hoops above abutment seat main longitudinal bars. Replace #8 hoops with #7 ties at pipe keys between girders 1 & 2 and 19 & 20.
5. For locations of Pipe Shear Key along Abutment Cap, see "Abutment 1 Layout" and "Abutment 2 Layout" sheets

11/06/14
DATE

REGISTERED CIVIL ENGINEER

PROFESSIONAL ENGINEER
JEFF B. ELMENDORP
No. 066309
Exp. 06/30/16
CIVIL
STATE OF CALIFORNIA

dh drakehaglan
AND ASSOCIATES
11060 White Rock Road, Suite 200
Rancho Cordova, CA 95670

REVISIONS			
STM	DATE	DESCRIPTION	APPROVED
1		REVISED PER ADDENDUM No. 1	

DESIGNED BY	DRAWN BY	CHECKED BY	SCALE
R. BAUTISTA	A. HYDE	S. JOHNSON	AS SHOWN

CITY OF TRACY

11th ST EAST TRACY OVERHEAD

ABUTMENT DETAILS NO. 4

S-13

SHEET 221
OF 260 SHEETS

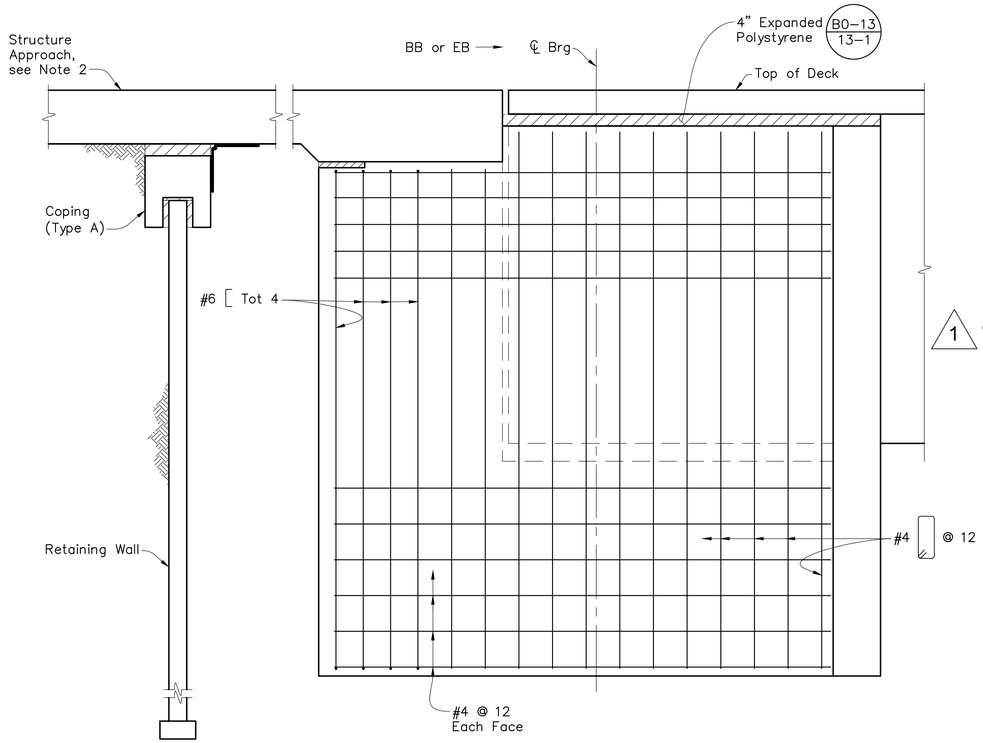

SECTION D-D

SCALE: 1/2"=1'-0"

NOTES:

1. For Architectural Treatment details on abutments and curtain walls, see "Aesthetic Details No. 3" sheet.
2. For details, see "Structure Approach Layout" sheet.
3. Not all Reinforcement shown.

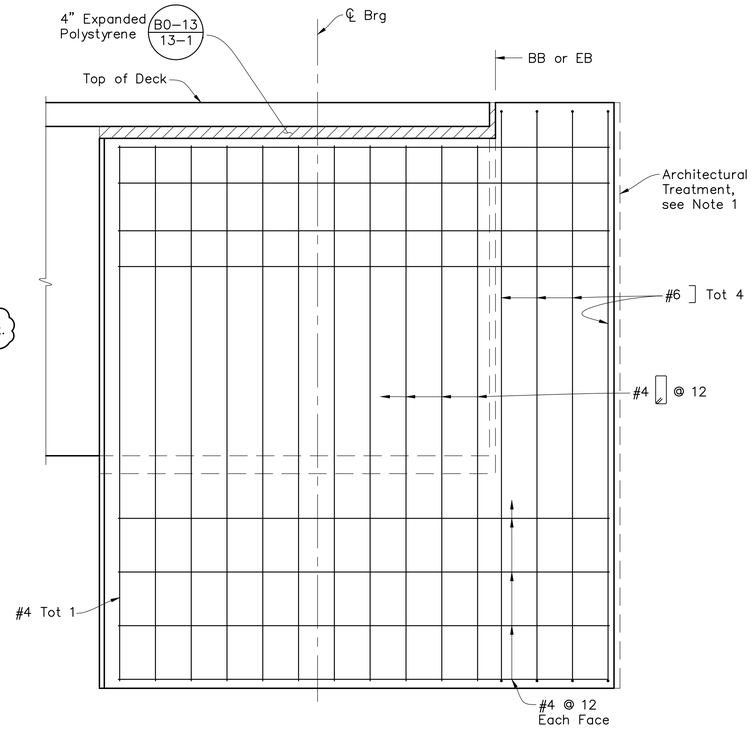

SECTION F-F

SCALE: 1/2"=1'-0"

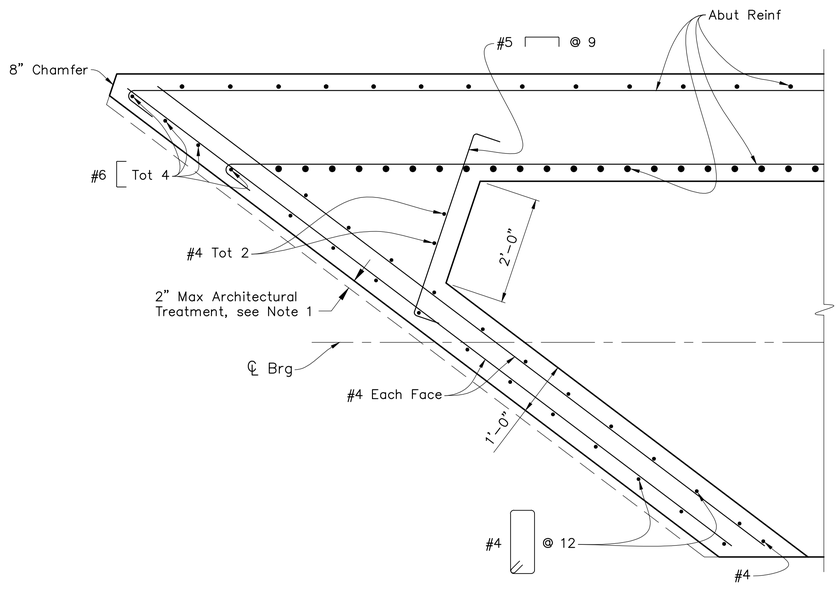

SECTION E-E

SCALE: 3/4"=1'-0"

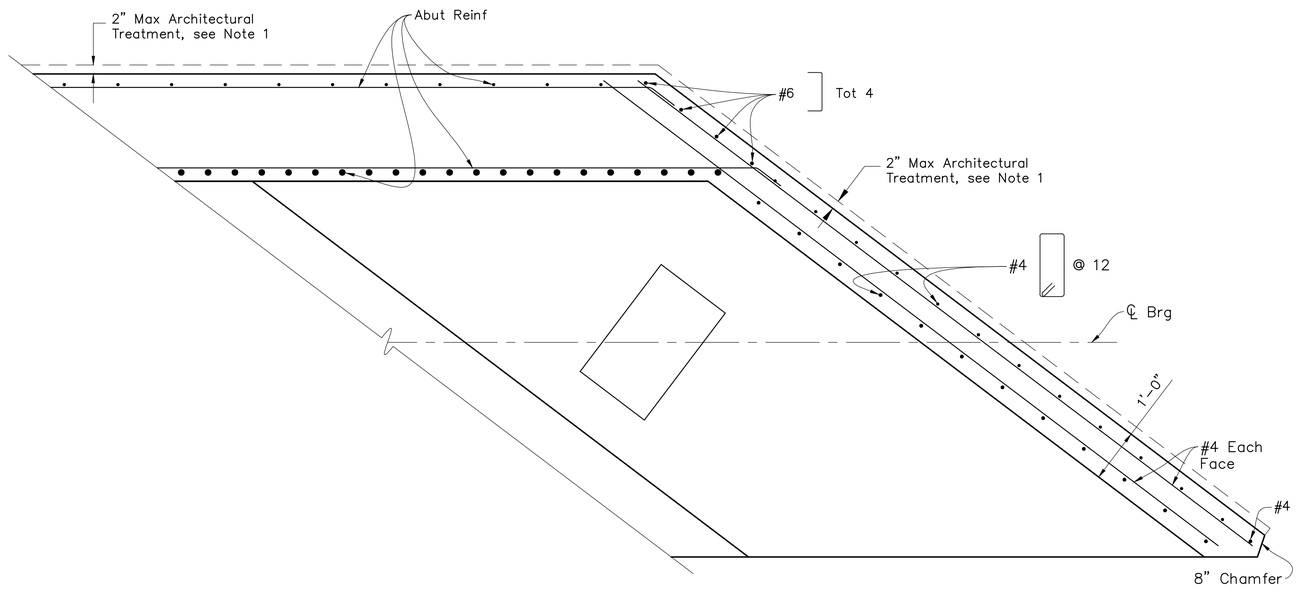

SECTION G-G

SCALE: 3/4"=1'-0"

11/06/14
DATE

REGISTERED CIVIL ENGINEER

PROFESSIONAL ENGINEER
REGISTERED
JEFF B. ELMENDORP
No. 066309
Exp. 06/30/16
CIVIL
STATE OF CALIFORNIA

dh drakehaglan AND ASSOCIATES
11060 White Rock Road, Suite 200
Rancho Cordova, CA 95670

REVISIONS			APPROVED
SYM	DATE	DESCRIPTION	
1		REVISED PER ADDENDUM No. 1	

DESIGNED BY	DRAWN BY	CHECKED BY	SCALE
R. BAUTISTA	A. BARBA	S. JOHNSON	AS SHOWN

CITY OF TRACY

11th ST EAST TRACY OVERHEAD

ABUTMENT DETAILS NO. 5

S-14

SHEET 222
OF 260 SHEETS

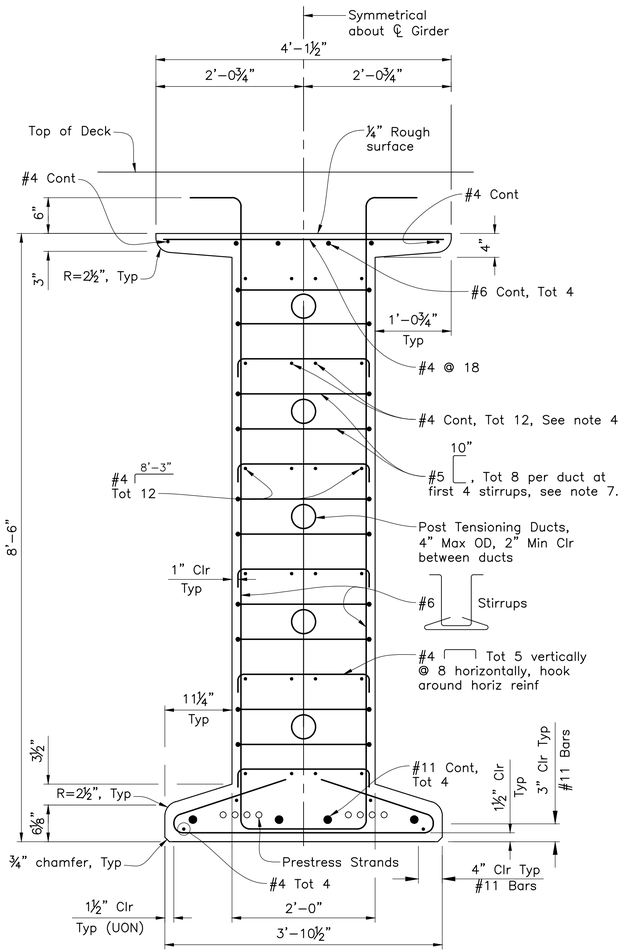

SECTION E-E (SEE NOTE 1)

SCALE: 1" = 1'–0"

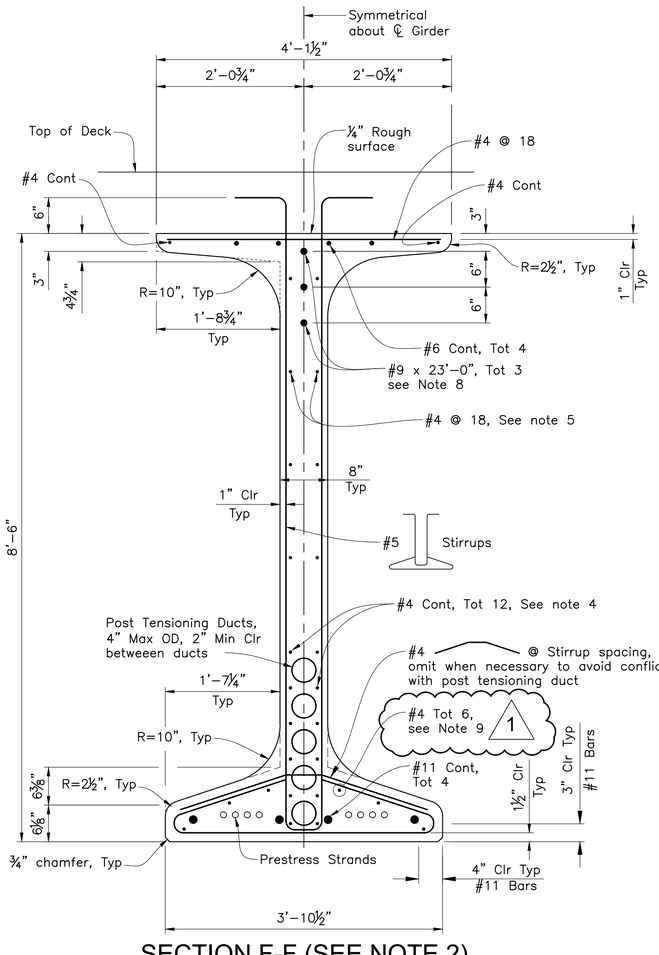

SECTION F-F (SEE NOTE 2)

SCALE: 1" = 1'–0"

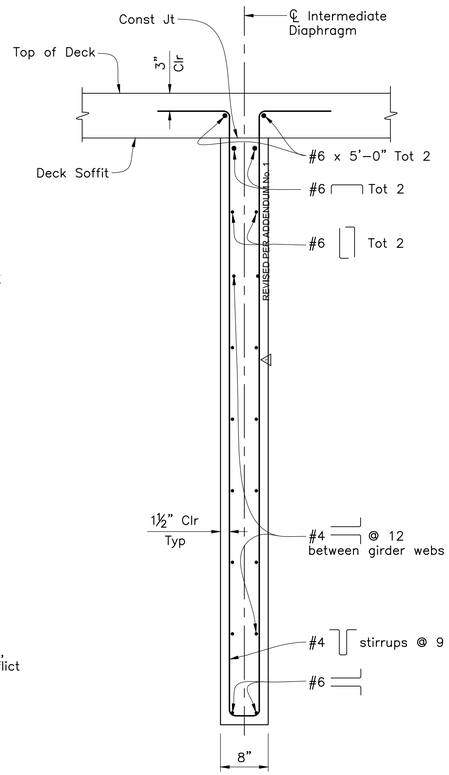

SECTION B-B

SCALE: 1" = 1'–0"

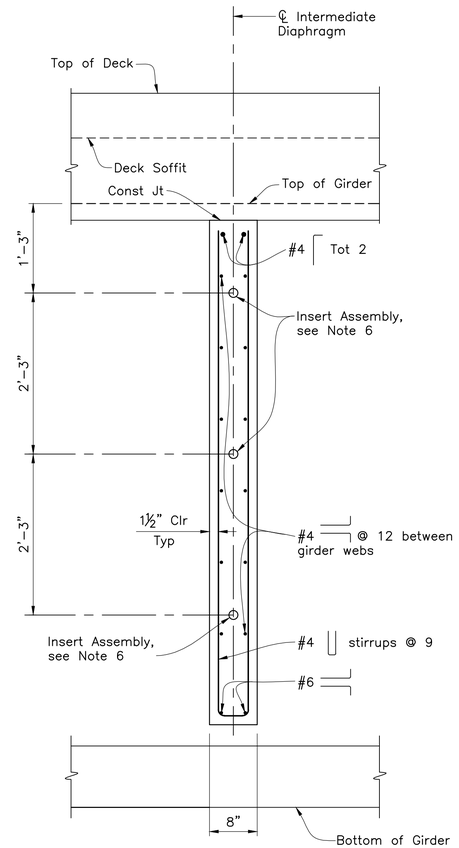

SECTION C-C

SCALE: 1" = 1'–0"

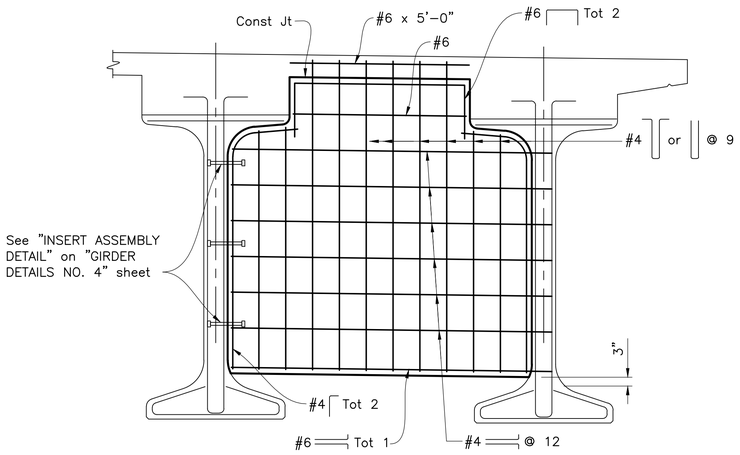

INTERMEDIATE DIAPHRAGM SECTION D-D

SCALE: 1/2" = 1'–0"

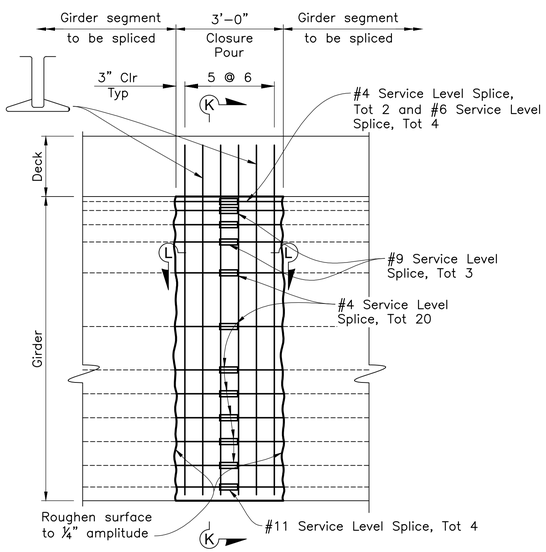

GIRDER SPLICE DETAIL

SCALE: 1/2" = 1'–0"

NOTES:

1. "Section E–E" shows end block dimensions and bar reinforcement for Girder Segment 1. End block dimensions and bar reinforcement similar for Girder Segment 3.
2. "Section F–F" shows typical girder dimensions and bar reinforcement for Girder Segment 2. Dimensions and bar reinforcement similar for Girder Segments 1 & 3.
3. For "Section K–K" and "Section L–L", see "Girder Details No. 4" sheet.
4. Location of bar reinforcement in girder web varies to clear post tensioning ducts, see "Longitudinal Web Reinforcement" on "Girder Details No. 1" sheet.
5. Length and number of bar reinforcement in girder web varies, see "Longitudinal Web Reinforcement" on "Girder Details No. 1" sheet.
6. Insert assemblies may be adjusted to clear post tensioning ducts as authorized by the Engineer.
7. For "Anchorage Zone Reinforcement Elevation" detail, see "Girder Details No. 4" sheet.
8. Reinforcement must be placed centered about ℄ Girder Splice. For limits, see "Longitudinal Section" on "Girder Details No. 1" sheet.
9. 1 Extend bar reinforcement 2'–6" into girder splice and lap with bars from adjacent segment.

11/06/14 DATE

REGISTERED CIVIL ENGINEER

REGISTERED PROFESSIONAL ENGINEER JEFF R. ELMENSDORP No. C66309 Exp. 06/30/16 CIVIL STATE OF CALIFORNIA

dh drakehaglan AND ASSOCIATES
1060 White Rock Road, Suite 200
Rancho Cordova, CA 95670

REVISIONS

SYM	DATE	DESCRIPTION	APPROVED
1		REVISED PER ADDENDUM No. 1	

DESIGNED BY J. ELMENSDORP
DRAWN BY K. DRESBACH
CHECKED BY S. JOHNSON
SCALE AS SHOWN

CITY OF TRACY

11th ST EAST TRACY OVERHEAD

GIRDER DETAILS NO. 3

S-21

SHEET 229 OF 260 SHEETS

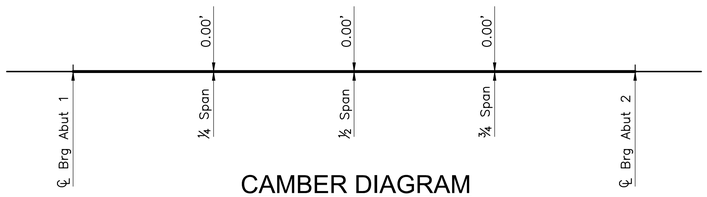

CAMBER DIAGRAM
NO SCALE
(Does not include allowance for falsework settlement)

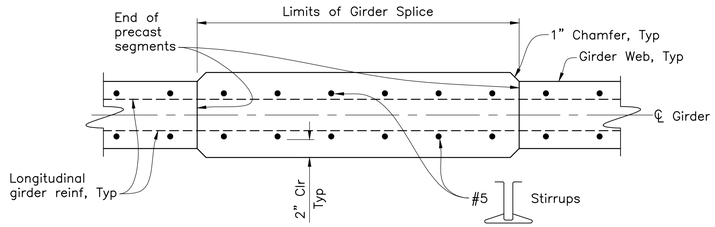

SECTION L-L
SCALE: 1 1/2"=1'-0"

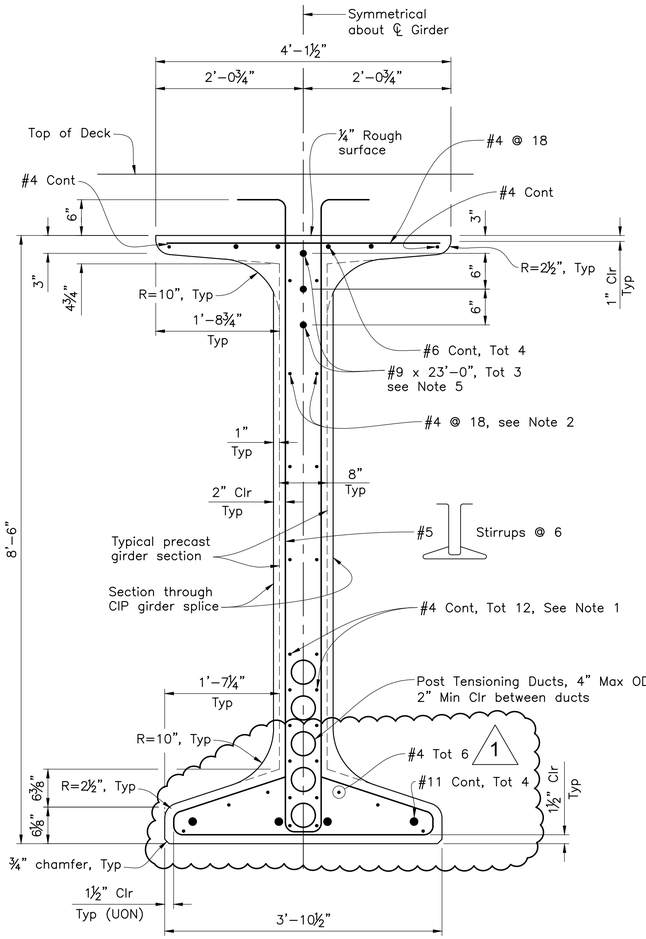

SECTION K-K
SCALE: 1"=1'-0"

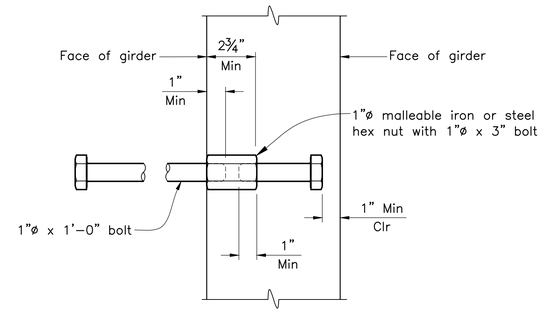

INSERT ASSEMBLY DETAIL
NO SCALE

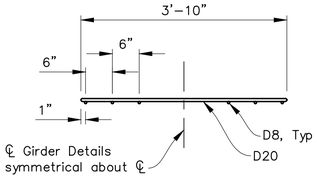

WWR - TOP
NO SCALE

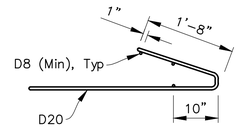

WWR - BOTTOM
NO SCALE

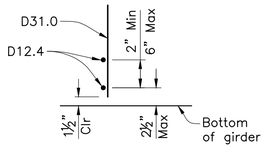

DETAIL A
SCALE: 1"=1'-0"

NOTES:

1. Bottom of stirrup WWR detail shown, top similar.
2. Longitudinal wire area shall be 40% or greater of vertical deformed wire's area

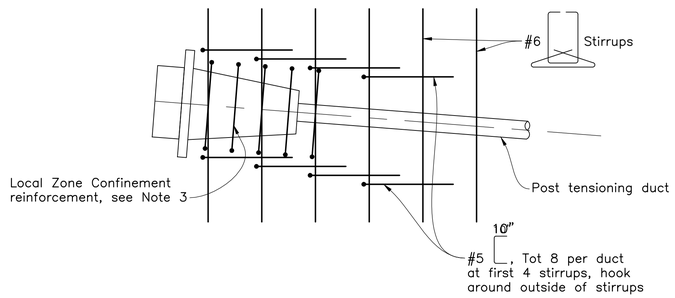

ANCHORAGE ZONE REINFORCEMENT ELEVATION
NO SCALE

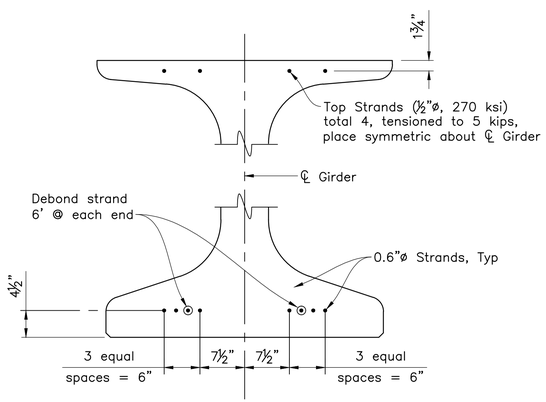

NOTE:
Contractor may adjust location of strands as approved by the Engineer.

PRETENSIONED STRANDS LOCATION
NO SCALE

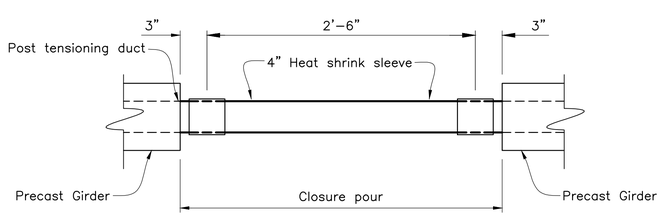

DUCT SPLICE DETAIL
NO SCALE

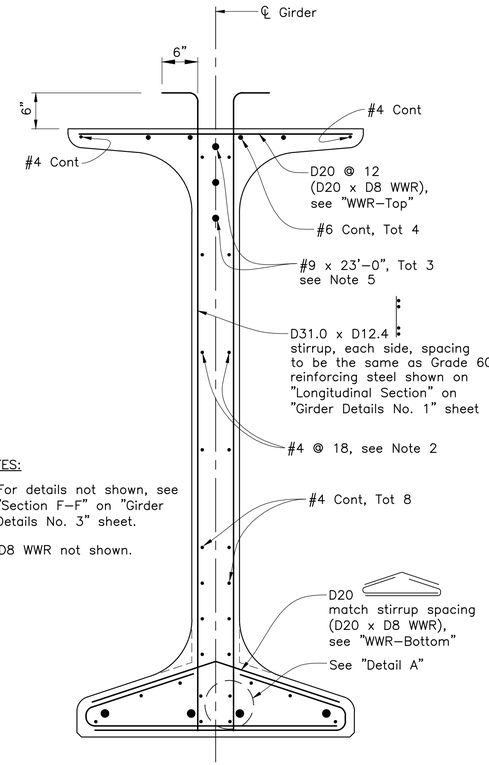

NOTES:

1. For details not shown, see "Section F-F" on "Girder Details No. 3" sheet.
2. D8 WWR not shown.

NOTE:
Welded wire reinforcement (WWR) can be substituted for Grade 60 reinforcing steel as authorized by the Engineer. WWR must conform to the requirements of ASTM A497 and must have a minimum of 75 ksi specified yield stress. Alternative stirrup shapes are permitted as authorized by the Engineer.

WELDED WIRE REINFORCEMENT (WWR) ALTERNATIVE
SCALE: 1"=1'-0"

NOTES:

1. Location of bar reinforcement in girder web varies to clear post tensioning ducts, see "Longitudinal Web Reinforcement" on "Girder Details No. 1" sheet.
2. Length and number of bar reinforcement in girder web varies, see "Longitudinal Web Reinforcement" on "Girder Details No. 1" sheet.
3. Local Zone Confinement reinforcement to be provided by the post-tensioning system supplier.
4. Screed line elevations for deck concrete pour to be determined by the Contractor and submitted to the Engineer for authorization.
5. Reinforcement must be placed centered about ℄ Girder Splice. For limits, see "Longitudinal Section" on "Girder Details No. 1" sheet.

11/06/14
DATE

REGISTERED CIVIL ENGINEER

REGISTERED PROFESSIONAL ENGINEER
JEFF B. ELMENSDORP
No. 056309
Exp. 06/30/16
CIVIL
STATE OF CALIFORNIA

dhdrakehaglan
AND ASSOCIATES
11060 White Rock Road, Suite 200
Rancho Cordova, CA 95670

REVISIONS			
STM	DATE	DESCRIPTION	APPROVED
1		REVISED PER ADDENDUM No. 1	

DESIGNED BY	J. ELMENSDORP	CHECKED BY	S. JOHNSON
DRAWN BY	K. DRESSBACH	SCALE	AS SHOWN

CITY OF TRACY

11th ST EAST TRACY OVERHEAD
GIRDER DETAILS NO. 4

S-22

SHEET 230
OF 260 SHEETS

PAVEMENT STRUCTURES QUANTITIES

STATION RANGE/LOCATION		SIDE	HOT MIX ASPHALT (TYPE A)	CLASS 2 AGGREGATE BASE	GEOSYNTHETIC PAVEMENT INTERLAYER (PAVING FABRIC)	PLACE HOT MIX ASPHALT DIKE (TYPE A)	COLD PLANE ASPHALT CONCRETE PAVEMENT (0.17' MAX)	DESCRIPTION/COMMENTS
BEGIN	END		TON	CY	SQFT	LF	SQFT	
"A" 10+23.49	"A" 10+43.49						1163	PAVEMENT CONFORM
"A" 10+23.49	"A" 16+00.00		316		27826			2" OVERLAY
"A" 10+23.49	"A" 16+00.00	WB	232	344				NEW STRUCTURAL SECTION
"A" 10+23.49	"A" 16+00.00	EB	449	666				NEW STRUCTURAL SECTION
"A" 10+74.80	"A" 11+24.85		14	20				NEW STRUCTURAL SECTION
"A" 12+94.68	"A" 13+88.39	WB	79	78				HEINZ DRIVEWAY (DRIVEWAY 1)
"A" 13+47.09	"A" 13+82.58	EB	4					DRIVEWAY
"A" 14+07.52	"A" 14+43.05	EB	4					DRIVEWAY
"A" 15+25.00	"A" 16+75.00	EB					3818	2" OVERLAY/VARIABLE DEPTH OVERLAY TRANSITION
"A" 16+00.00	"A" 17+00.00		135		6433			VARIABLE DEPTH OVERLAY
"A" 16+00.00	"A" 17+00.00	WB	44	66				NEW STRUCTURAL SECTION
"A" 16+00.00	"A" 17+00.00	EB	9	13				NEW STRUCTURAL SECTION
"A" 17+00.00	"A" 18+92.02		814	1207				INTERSECTION NEW STRUCTURAL SECTION
"A" 18+92.02	"A" 20+43.11	WB	260	386				NEW STRUCTURAL SECTION
"A" 18+92.02	"A" 20+43.11	EB	212	315				NEW STRUCTURAL SECTION
"A" 20+43.11	"A" BB 27+36.98	WB	943	1397				NEW STRUCTURAL SECTION
"A" 20+43.11	"A" BB 27+36.98	EB	805	1193				NEW STRUCTURAL SECTION
"A" 20+43.19	"A" 26+28.04	EB		81				BASE UNDER BARRIER GUTTER
"A" 20+44.17	"A" 27+56.26	WB		99				BASE UNDER BARRIER GUTTER
"A" 27+30.29	–			3				BASE UNDER OUTFALL STRUCTURE 1
"A" 29+27.24	–			2				BASE UNDER OUTFALL STRUCTURE 2
"A" 30+08.23	"A" 37+85.44	EB		108				BASE UNDER BARRIER GUTTER
"A" EB 30+27.51	"A" 37+85.44	WB	897	1328				NEW STRUCTURAL SECTION
"A" EB 30+27.51	"A" 37+85.44	EB	1028	1523				NEW STRUCTURAL SECTION
"A" 31+36.45	"A" 37+81.33	WB		90				BASE UNDER BARRIER GUTTER
"A" 37+85.44	"A" 39+50.00		520	770				NEW STRUCTURAL SECTION
"A" 39+18.46	"A" 40+57.45	WB	67				284	DRIVEWAY 5/PAVEMENT CONFORM
"A" 39+50.00	"A" 40+78.45	WB	22	33				NEW STRUCTURAL SECTION
"A" 39+50.00	"A" 40+01.36	EB	27	40				NEW STRUCTURAL SECTION
"A" 39+50.00	"A" 41+64.42		201		15848		14689	VARIABLE DEPTH OVERLAY
"A" 40+27.84	"A" 41+02.70	EB	13				351	DRIVEWAY 6/PAVEMENT CONFORM
"A" 40+99.96	"A" 41+36.41	EB	1			38		HMA DIKE
"A" 41+62.42	"A" 46+92.73		494		39505			2" OVERLAY
"A" 41+62.42	"A" 46+92.73		12	5				FEATHER HMA
"A" 46+72.73	"A" 46+92.73						1479	PAVEMENT CONFORM
"M" 10+62.09	"M" 18+16.99	EB	104	153				NEW STRUCTURAL SECTION
"M" 11+13.98	"M" 18+16.99		273		23293		13150	VARIABLE DEPTH OVERLAY/WEDGE GRIND
"M" 18+16.99	"M" 20+09.01	WB	36	54				NEW STRUCTURAL SECTION
"M" 18+16.99	"M" 20+09.01		78		7644			VARIABLE DEPTH OVERLAY
"M" 18+16.99	"M" 20+09.01	EB	59	87				NEW STRUCTURAL SECTION
"M" 18+79.39	"M" 20+09.01		64	94				MEDIAN NEW STRUCTURAL SECTION
"M" 19+89.01	"M" 20+09.01	WB					522	PAVEMENT CONFORM
"M" 19+89.01	"M" 20+09.01	EB					513	PAVEMENT CONFORM
"B" 10+10.00	"B" 19+13.20		201	199				NEW STRUCTURAL SECTION
"R" 10+25.00	"R" 22+75.39		465	613				NEW STRUCTURAL SECTION
"MR" 10+25.00	"MR" 16+37.22			166				NEW STRUCTURAL SECTION
		TOTAL	8882	11133	120549	38	35969	

1

1

1

11/06/14
DATE

REGISTERED CIVIL ENGINEER

REGISTERED PROFESSIONAL ENGINEER
MELISSA K. McCONNELL
No. 72264
Exp. 06/30/16
CIVIL
STATE OF CALIFORNIA

dh drakehaglan AND ASSOCIATES
11060 White Rock Road, Suite 200
Rancho Cordova, CA 95670

REVISIONS

SYM	DATE	DESCRIPTION	APPROVED
1		REVISED PER ADDENDUM No. 1	

DESIGNED BY M. McCONNELL
DRAWN BY A. BOYES
CHECKED BY J. SILVA
SCALE NO SCALE

CITY OF TRACY

11th ST EAST TRACY OVERHEAD

SUMMARY OF QUANTITIES

Q-2

SHEET 2
OF 15 SHEETS

ROADSIDE SIGN QUANTITIES

1

SHEET No.	CODE	PANEL SIZE		ROADSIDE SIGN		REMOVE ROADSIDE SIGN	RECONSTRUCT SIGN	RESET ROADSIDE SIGN	RELOCATE ROADSIDE SIGN	DESCRIPTION/COMMENTS
		Horiz	Vert	1 POST	INSTALLED ON STREET LIGHT					
		IN x IN		EA	EA	EA	EA	EA	EA	
PD-1	R81 (CA)	12	8	2						
	R81B (CA)	8	5	1						
	W4-2	36	36	1						
	W10-1	36 Dia.	36 Dia.	1						
	W48 (CA)	30	24	1						
	R4-7					2				
	-					1				MAC ARTHUR DRIVE
	R13A (CA)							1		
	W8-5							1		
	R26 (CA)							1		
	R28A (CA)					1				
	-								1	LOCAL TRUCK ROUTE
	-						1			EXTRA SPACE STORAGE
PD-2	-						1			EXTRA SPACE STORAGE
	R81 (CA)	12	8	3						
	R81A (CA)	12	5	1						
	R1-1	36	36	1						
	W10-1					1				
	R26 (CA)					1		1		
	R26A (CA)					2				
	-					1				MAC ARTHUR DRIVE NORTH
	W1-1 (RT)								1	
	W13-1P "15 MPH"								1	
	R2-1 "35 MPH"								1	
PD-3	R2-1 "35 MPH"	30	36	1						
	R26A (CA)					1				
	R26 (CA)					1				
	W1-1					1				
	W13-1 "15 MPH"					1				
	-								1	TRUCK ROUTE THRU/LOCAL ROUTE ONLY
PD-4	W1-8 (LT)	18	24	1						
	R26 (CA)					1				
	W1-8					5				
	W1-8 (LT)								2	
PD-5	R2-1 "35 MPH"	30	36		1	1				
	R48 (CA)	24	30		1	1				
	W8-5					1				
	W3-3								1	RELOCATE TO NEW FLASHING BEACON
PD-6	-								1	TRACY CITY LIMIT, RELOCATE TO PD-5, INSTALL ON STREET LIGHT
	R81 (CA)	12	8	2						
	R81A (CA)	12	5	1						
	R81B (CA)	8	5	1						
			TOTAL	17	2	22	2	4	9	

Melissa K. McConnell
11/06/14
DATE
REGISTERED CIVIL ENGINEER

PROFESSIONAL ENGINEER
MELISSA K. McCONNELL
No. 72264
Exp. 06/30/16
CIVIL
STATE OF CALIFORNIA
REGISTERED

dh drakehaglan AND ASSOCIATES
11060 White Rock Road, Suite 200
Rancho Cordova, CA 95670

REVISIONS			
SYM	DATE	DESCRIPTION	APPROVED
1		REVISED PER ADDENDUM No. 1	

DESIGNED BY	DRAWN BY	CHECKED BY	SCALE
M. MCCONNELL	A. BOYES	J. SILVA	NO SCALE

CITY OF TRACY

11th ST EAST TRACY OVERHEAD

SUMMARY OF QUANTITIES

Q-15

SHEET 15
OF 15 SHEETS

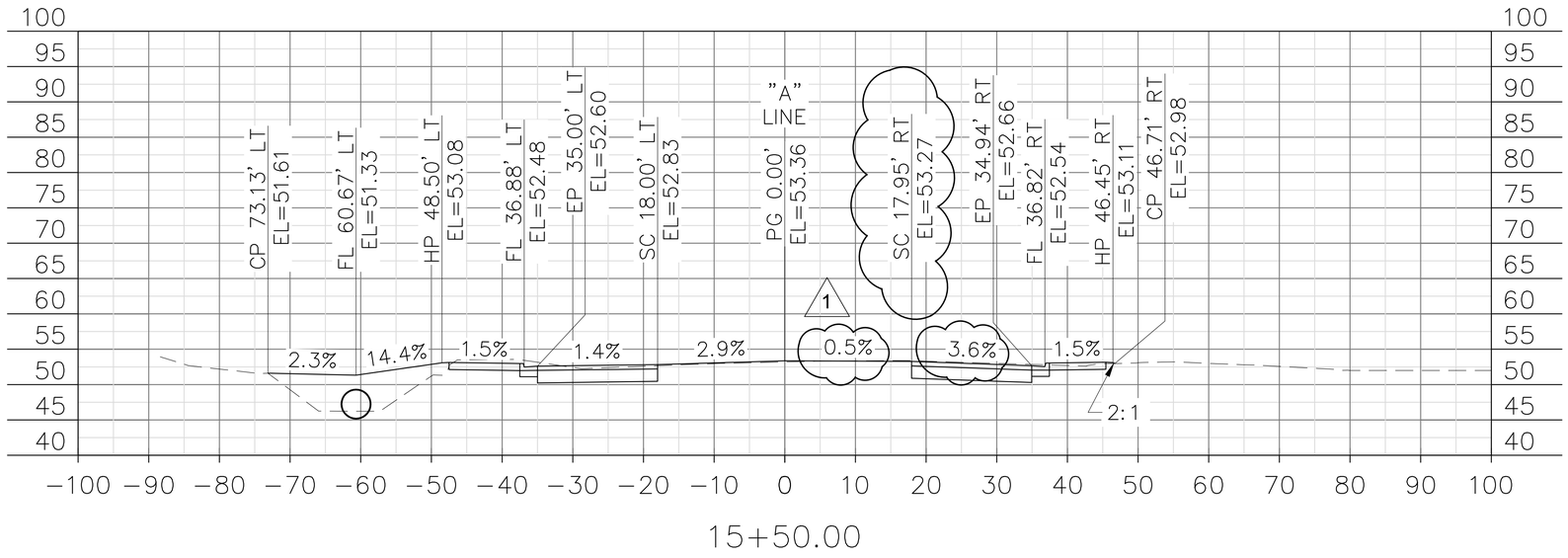

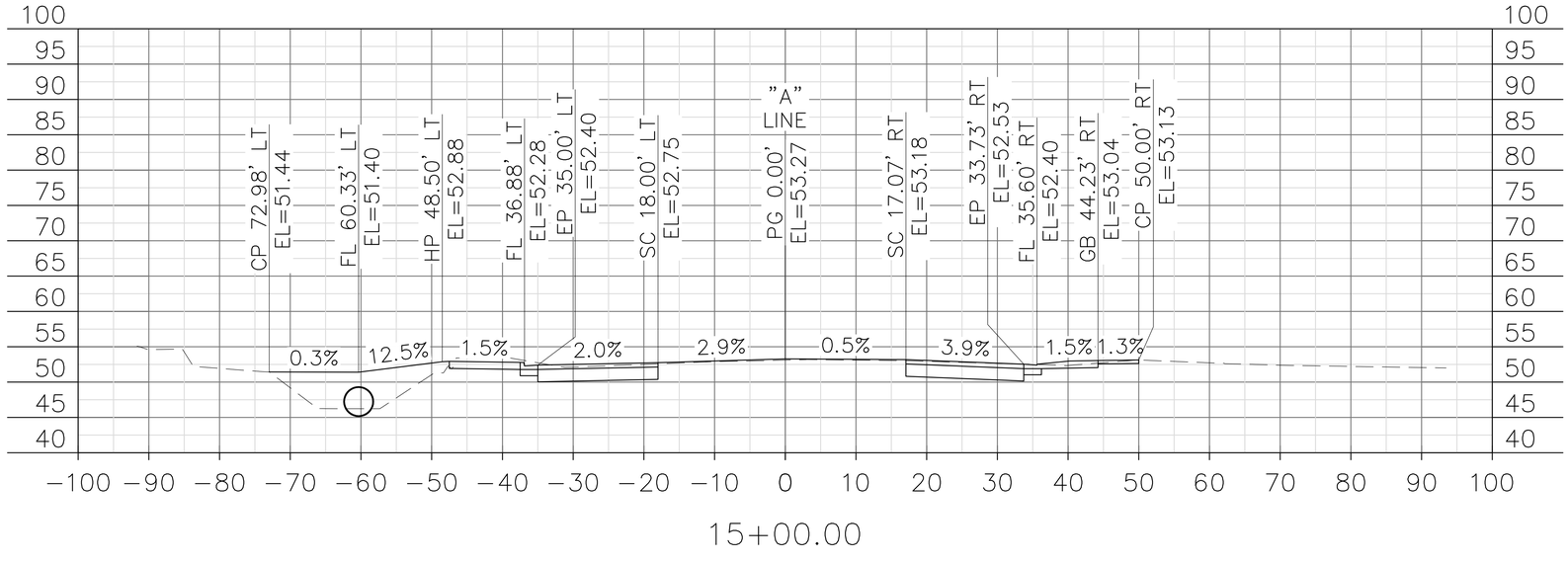

FOR ACCURATE SCALE WHEN PLOTTING USE 24" X 36" PAPER

02/05/15
DATE

dh drakehaglan AND ASSOCIATES
11060 White Rock Road, Suite 200
Rancho Cordova, CA 95670

REVISIONS			
STM	DATE	DESCRIPTION	APPROVED
1		REVISED PER ADDENDUM No. 1	

DESIGNED BY	M. MCCONNELL	CHECKED BY	J.SILVA
DRAWN BY	A. BOYES	SCALE	1"=10'

CITY OF TRACY

11th ST EAST TRACY OVERHEAD

11th STREET CROSS SECTIONS

CS-6

SHEET 6
OF 68 SHEETS

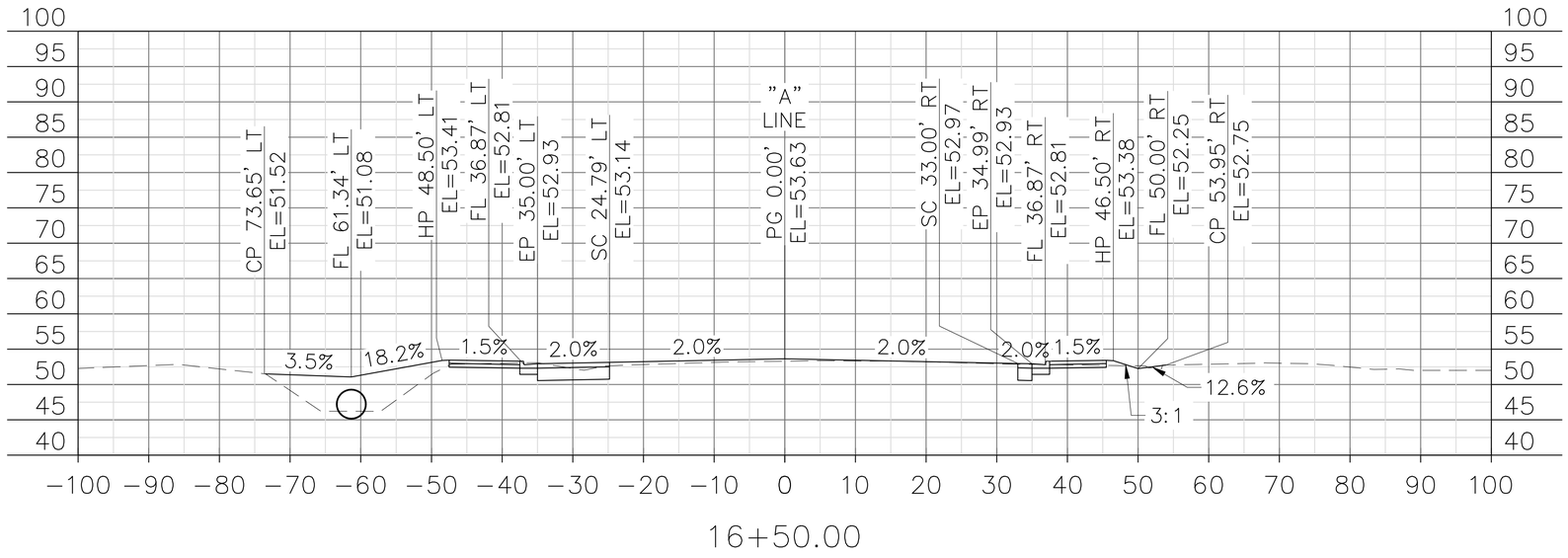

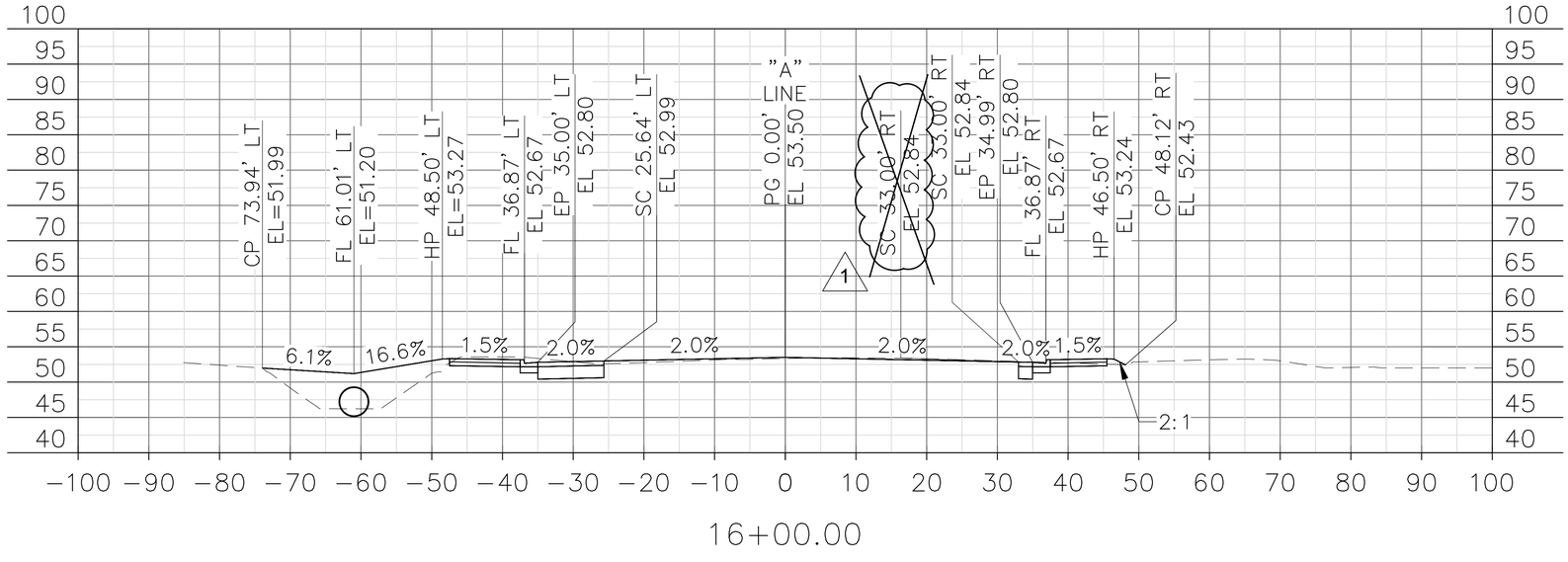

FOR ACCURATE SCALE WHEN PLOTTING USE 24" X 36" PAPER

02/05/15
DATE

dh drakehaglan AND ASSOCIATES
11060 White Rock Road, Suite 200
Rancho Cordova, CA 95670

REVISIONS			
STM	DATE	DESCRIPTION	APPROVED
1		REVISED PER ADDENDUM No. 1	

DESIGNED BY	DRAWN BY	CHECKED BY	SCALE
M. MCCONNELL	A. BOYES	J.SILVA	1"=10'

CITY OF TRACY

11th ST EAST TRACY OVERHEAD
11th STREET CROSS SECTIONS

CS-7

SHEET 7
OF 68 SHEETS

No.	Question	Response	Addendum 1 Item Number
1	We are missing cross sections for the "D" Line (Temporary Detour). Also, having 8 cross sections per page is too small to perform accurate takeoffs. Can we get one cross section per page?	Refer to Addendum 1. Temporary Detour construction cross sections have been uploaded to the City website as supplemental information (Revised Information Handout Item A). The construction cross sections included previously were at a scale of 1" = 20'. Updated cross sections at a scale of 1" = 10' are provided.	**14**
2	We were looking for Profile Cross-sections for earthwork development not the typical cross-sections. Would those be available?	Refer to Addendum 1. The plans contain the typical cross sections (see sheets X-1 through X-6), profiles (see sheets P-1 through P-7) and quantities sheets which contain tables with a breakdown of earthwork quantities by station (see sheets Q-3 and Q-4). Construction cross sections for 11th Street, North MacArthur Drive, the bike trail, and the temporary detour at a scale of 1" = 10' have been uploaded to the City website as supplemental information (Revised Information Handout Item A). Construction cross sections for 11th Street, North MacArthur Drive, the bike trail and the temporary detour at a scale of 1" = 10' should be uploaded to the City website by 5 pm on 2/11/15.	**14**
3	In the bid items list it states the Geosynthetic Pavement Interlayer is Paving Fabric, the Plans on the other hand state that it is Trupave. I couldn't find the specs for it so I am wonder which we should submit a quote for.	Sewer/Water Trench Detail (1/3) on sheet SW-9 calls out to Install Trupave (or equal) polyester non-woven reinforcing fabric with SS-1h Tack Coat. Trupave or equal for the fabric only applies to the resurfacing for the utility trenching. Per Section 77 of the Special Provisions, the payment for the fabric for the resurfacing for the utility trenching is paid for in the payment for Water Line Modifications and Sewer Line Modifications. On sheet CD-7, there are details specifying the geosynthetic pavement interlayer (paving fabric) that is required to be placed beneath the new HMA overlay. This is the item that is shown on the bid item list and the geosynthetic pavement interlayer must comply with Section 39 of the Caltrans Standard Specifications. The quantity sheet Q-2 contains a quantity breakdown of the geosynthetic pavement interlayer (paving fabric) by station.	**N/A**
4	What are the existing pavement sections on the 11th Street and N. McArthur Drive? Typical sections on sheet X-1 – X-6 are missing this information.	The thickness of the existing pavement sections for 11th Street and North MacArthur Drive is unknown since there are no available as-built plans for these two roadways. Utility potholing performed during the design phase does indicate that the AC thickness varies for both roadways. The AC thickness varied from 8" to 14" on 11th Street and from 8" to 20" on North MacArthur Drive based on the limited amount of potholing performed. These potholing results have been uploaded to the City website as supplemental information (Information Handout Item H).	**17**

No.	Question	Response	Addendum 1 Item Number
5	Section 49 was changed to require full length casing be oscillated or rotated into place. Usually this section does not specify the means and methods the contractor must use for CIDH piling installation. Thousands of pilings have been successfully installed using methods other than full length casings. Specifying the full length casing method will limit competition and may increase the cost of the piling. We request that the contractor be allowed to choose him method of installation within normal Caltrans Specification.	Full length temporary casings oscillated or rotated in place must be used for constructing the CIDH piles per Special Provisions Section 49-1.03.	**N/A**
6	As follow up to inquiry at Pre-Bid meeting today, Teichert requests that the City provide design CAD files for subject project in order to expedite bid preparation and meet the prescribed bid date. The following files are preferred if available: 1) Alignments in LandXML or DWG format 2) Existing Surface in DGN, DWG or Land XML format (Include 3D trimesh, boundary, 3D breaklines and 3D contours) 3) Design 2D layout in DGN or DWG format (Include pavement, curb and other planview linework)	Design CAD files will not be provided at this time.	**N/A**
7	I am working on the 11th Street project and have an understanding that the AutoCAD files are available upon request. May I request these files with the existing contour grading and the design grades. This will in return provide for an accurate take-off for the earthwork calculations.	Design CAD files will not be provided at this time.	**N/A**
8	1). Are bridge removal plans required for removing the Heinz Driveway Bridge and the Timber Bridge over the irrigation canal? 2). Sheet R-33 (Sheet 189 of 260) Section G-G and Sheet R-34 (Sheet 190 of 260) Lining Connection Detail 1; Shows a portion of the existing channel lining to remain and to receive dowels for a new canal bottom. After observing the canals existing condition yesterday after the pre-bid meeting, the condition and structural integrity of the concrete is so old, frail and brittle that it will crumble in an attempt to drill dowels and remove only a portion as stated on the plans. Furthermore, the existing channel linings have a significant amount of sediment/silt and debris in the channel. It will be impossible to extract the existing sediment/silt without damaging the channel lining to remain. How is this work supposed to be achieved without damaging the existing lining to remain?	1) Yes bridge removal work plans are required for removing the Heinz Driveway Bridge and the Timber Bridge over the irrigation canal per Section 15-4 of the Standard Specifications. 2) The contractor must perform the work shown and take care as to not damage the existing canal that is not shown to be removed or reconstructed in accordance with Section 15 of the Standard Specifications..	**N/A**
9	The Detour Layout Plans DE-3- DE-5 show constructing 3 temporary retention basins. The revised cross sections we got for the D Line do not show the basins. What are the bottom elevations and the side slope requirements? Can you please provide us a contour grading plans that would show the topo and the proposed contour lines for those temporary retention basins?	The exact depth, width and length of the three temporary retention basins is to be determined by the Contractor as long as the volume of the basins shown on the detour layout plans are met. It is the responsibility of the contractor to verify the location of existing utilities and to construct the temporary retention basins such that no conflicts occur between the utilities and the basins.	**N/A**

No.	Question	Response	Addendum 1 Item Number
10	Will all bidder's questions be published and answered? Will the answers be contractually binding, or are they provided for information only?	Yes, all questions that are sent to Zabih Zaca (zabih.zaca@ci.tracy.ca.us) in writing by 5 pm on February 18, 2015 will be answered and posted to the City website. Responses to bidder inquiries, unless incorporated into formal addenda to the contract, are not a part of the contract, and are provided for the bidder's convenience only. In some instances, the question and answer may represent a summary of the matters discussed rather than a word-for-word recitation. The availability or use of information provided in the responses to bidder inquiries is not to be construed in any way as a waiver of the provisions of 2-1.30 [2-1.03], "Job Site and Document Examination," of the Standard Specifications or any other provision of the contract, the plans, Standard Specifications, or special provisions nor to excuse the contractor from full compliance with those contract requirements. Bidders are cautioned that subsequent responses or contract addenda may affect or vary a response given previously.	**N/A**
11	If the settlement periods fall on the critical path, are working days charged during the settlement?	Yes, working days are charged during the settlement based on the settlement period listed in the Special Provisions. From Section 4-1.40F of the Special Provisions: "The estimated duration of the settlement periods are listed in the settlement tables in Section 19 of these specifications. The Engineer may allow an increase or decrease in any settlement period. An allowed increase or decrease in any settlement period will result in an increase or decrease in the number of working days if the settlement period is considered to be the current controlling operation in conformance with Section 8-1.05 Time of the standard specifications. Adjustments of contract time due to increases or decreases in settlement periods will be made by contract change order." There will not be any increase or decrease in compensation for any adjustment in working days.	**N/A**
12	Section 5-1.36D indicates the contractor is to submit a plan for protecting the Sprint fiber optic lines. The section makes no mention that the Contractor is to implement said plan or that the contractor is to pay for the cost of protecting the lines. Please confirm that any and all work to protect the lines will be borne by the City.	Refer to Addendum 1. The cost for preparing and implementing the plan will be the Contractor's responsibility. Per section 9-1.03 of the Standard Specifications: "Full compensation for work specified in divisions I, II, and X is included in the payment for the bid items unless: 1. Bid item for the work is shown on the Bid Item List 2. Work is specified as change order work"	**26**

No.	Question	Response	Addendum 1 Item Number
13	Section 5-1.36D states the contractor is to locate and then video inspect drain lines before and after RW 4 and RW 6 work. Please confirm that the contractor is not responsible for any damage so long as regular construction processes are utilized. Please also confirm that no protection measures are required for working around these drain lines.	The Contractor must comply with Section 15 of the Standard Specifications. Portions of the existing facilities that are to remain in place must be protected, preserved, and maintained. If you damage a portion of the facility that is to remain in place, you must repair or replace the damaged facility.	**N/A**
14	In order to reduce cost, will the Contractor be allowed to keep traffic configured to two (2) lanes (one EB & one WB) in Stage 5 so that the D-Line temporary embankment can be removed, reused, and placed for the A-Line permanent embankment?	Refer to Addendum 1.	**32**
15	Please identify the location & detail for 2,200 LF of minor concrete mow strip (Bid Item No. 169).	Location of minor concrete mow strip is shown on the Planting Plan Sheets (sheets PP-1 and PP-2). City Standard Plan Detail for concrete mow strip (detail D7.11) is shown on the Landscape Details sheet (sheet LD-1).	**N/A**
16	At the pre-bid, the Engineer did not have reservations about providing bidders with CAD files (mainly for earthwork). Will the City of Tracy provide these files? If yes, when?	Design CAD files will not be provided.	**N/A**
17	Section 5-1.02C limits certain work to night and/or weekend only around the railroad tracks. What is the cost of flagging an 8 hour night shift and what is the cost of flagging an 8 hour weekend shift? Referencing the amount we are to include in our bid, the $325,000 is for using the $1300/day for 250 shifts. If the night or weekend flagging costs are greater than $1300/8 hour shift, is the contractor responsible for half the cost over the $325,000, or is the contractor responsible for paying the cost of 250 days of flagging whatever they cost, with the City and Contractor splitting the difference beyond that amount? Please clarify. If the contractor cancels a shift due to a reason beyond its control (i.e. inclement weather) is the contractor responsible for paying the cost of railroad flagging for that day?	Refer to Addendum 1.	**25**

No.	Question	Response	Addendum 1 Item Number
18	Bid Item #22: Prepare Storm Water Pollution Prevention Plan. Does this item include revising and submitting the SWPPP provided in Appendix E of Book 3? Will the Contractor be expected to provide a Qualified SWPPP Developer (QSD) to act as the Water Pollution Control Manager in accordance with California Department of Transportation Standard Specifications Section 13?	The Contractor must comply with Section 13 of the standard specifications. Section 13-3 states: Prepare storm water pollution prevention plan includes developing and implementing the SWPPP, providing a WPC manager, conducting water pollution control training, and monitoring, inspecting, and correcting water pollution control practices. The SWPPP provided in Appendix E of Bid Book 3 was prepared for the purpose of obtaining permit coverage under the NPDES General Permit. The SWPPP was submitted to the RWQCB and a WDID number has been issued. The Contractor's WPC manager must revise the SWPPP as necessary to suit his planned means and methods of construction, or he may prepare a new SWPPP. The Contractor's attention is directed to Section 13-3.01B "Submittals" of the State Standard Specifications. Section 13-1.01D(3)(a) General states: The WPC manager must be a QSP if the project requires a WPCP. The WPC manager must be a QSD if the project requires a SWPPP. Assign 1 WPC manager to implement the WPCP or SWPPP, whichever is applicable for the project.	**N/A**
19	Referencing Section 51-1.01A, if the contractor pours the footing portion of the 732B modified barrier rail separate from the top portion, is the bottom portion required to be integrally colored?	The bottom footing portion of the Concrete Barrier (Type 732B Modified) is not required to be integrally colored.	**N/A**
20	Referencing "Median Detail" on sheet 225: can the #4s @ 12" extending from the bridge deck into the median curb be drilled and bonded into the deck in lieu of casting them into the bridge deck as shown?	During construction, the contractor may propose that the #4 @ 12 extending from the bridge deck into the median be drilled and bonded into the deck in lieu casting them into the bridge deck as shown. This proposal will need to be submitted to the Engineer for approval.	**N/A**
21	Note 5 on sheet 215 references "Aesthetic Details No. 2" sheet. No aesthetic details exist on sheet 201. Is the correct reference to sheet 202, "Aesthetic Details No. 3"?	Refer to Addendum 1.	**9**

No.	Question	Response	Addendum 1 Item Number
22	We have reviewed the bid documents, specifically Division VI, Section 47-6.01A (SP103) and found only two MSE wall suppliers listed as possible "alternative earth retaining systems"-Reinforced Earth and MSE Plus. Please consider this our (Tensar's) formal request to be the third MSE vendor option on your project. We have attached a list of project references with similar geometry and loading conditions we have successfully completed. We have also attached the Caltrans pre-approved manufacturer list for alternative retaining systems, on which Tensar is represented twice. An approval of Tensar will require the removal of the statement, "Soil reinforcement must be galvanized steel" from Division VI, Section 47-6.01A SP-103, as Tensar's reinforcing elements are non-metallic. This is an cost savings and aesthetic benefit to the city as, after these public funds have been spent on the elaborate liners and textures for the MSE walls, the faces will not be marred with instrumentation to monitor the corrosion rate of the steel reinforcing via test wires. Also, please be aware, while the specifications, 47-6.01C(1) calls for AASHTO LRFD design methodologies. Tensar can and does very frequently design in LRFD for our approved MESA and ARES systems, however, no MSE panel provider has their approval with Caltrans in LRFD (see attached list).	Soil reinforcement must be galvanized steel as specified.	**N/A**
23	Reference is made to e-mail dated February 11, 2015, regarding CAD files for subject project. As of this date, CAD files have not been made available to bidders. Please confirm status of CAD file availability to bidders.	Design CAD files will not be provided at this time.	**N/A**
24	Reference is made to Proposal Page P-19 "Designation of Subcontractors". Teichert requests that this sheet be revised to remove the requirement for listing the DUNS # for each subcontractor. The DUNS# will require undue effort to obtain this information on bid day for the low subcontractors which may not be determined until last moments before bid closing time.	Refer to Addendum 1.	**20**
25	Will the City provide construction water for subject project at no cost to the contractor? Or has the City made arrangements with local water agencies to provide construction water for the project?	The City will provide the water at no cost and will provide a water meter to the Contractor for the fire hydrants in order to track use.	**N/A**

No.	Question	Response	Addendum 1 Item Number
26	Reference is made to Special Provisions Section 14-11.06C(4) "Disposal" which states, "You may dispose up to 25,000 gallons of water or water for a continual period of three months from the first day water is disposed of in the City's sewer system whichever occurs first. You may not discharge any water from the CIDH pile dewatering into the sewer system…….For water encountered in excess of the limits stated above or from the CIDH pile dewatering, you must dispose of the water at an appropriate California permitted facility after laboratory analysis results are accepted." At the Pre-Bid, it was possibly stated that discharge could be 25,000 gal per day. Is the City allowing 25,000 gal per day or only 25,000 gal total for a 3 month period? Would this 3-month period be for each season (calendar year)? Are there any permitted facilities that the City owns? Who needs to accept the laboratory results for the discharged water? Just the receiving facility? Just the City? Please clarify.	This section applies to groundwater containing CAM 17 metals. In any given year, you may dispose only up to 25,000 gallons in the City sewer system or water for a continual period of 3 months, whichever occurs first. If the volume exceeds 25,000 gallons or a duration of 3 months, a state permit is required which would be the responsibility of the Contractor, including paying for all fees and permits. The City does not own any permitted facilities. Both the Engineer and the receiving facility (if applicable) needs to accept the laboratory results.	**N/A**

No.	Question	Response	Addendum 1 Item Number
27	Please confirm that the following statements are true: • 14-11.03C(6) Disposal The Engineer will obtain the State of California Board of Equalization identification no, for hazardous waste disposal. The Engineer will sign all hazardous waste manifests. Notify the Engineer 5 business days before the manifests are to be signed. Please confirm that the Contractor is not responsible for any costs associated with treating or amending the Z-2 Soils, if required by the Class I disposal facility. Please confirm that the Contractor is not responsible for any Board of Equalization costs (fees, taxes, permits, etc…). • 14-11.02F(3) Hazardous Waste Transport and Disposal Dispose of hazardous waste within California at a disposal site operating under a permit issued by DTSC. The Engineer will obtain the US EPA Generator Identification Number for hazardous waste disposal. The Engineer will sign all hazardous waste manifests. Notify the Engineer 5 business days before the manifests are to be signed. The Department will not consider you a generator of the hazardous waste and you will not be obligated for further cleanup, removal, or remedial action for such material handled or disposed of under these specifications and the appropriate State and federal laws and regulations and county and municipal ordinances and regulations regarding hazardous waste.	Refer to Addendum 1 and Caltrans Standard Specifications	**30**
28	Reference is made comments made at Pre-Bid meeting regarding wick drains and settlement periods. It was stated that if the wick drains were not installed, the settlement periods would be increased. Further reference is made to Parikh Consultants, Inc. Foundation Report dated October 29, 2014, Table 8 "Summary of Settlement Analysis Results". This table provides settlement period for project without the use of wick drains. Please confirm that project construction can be completed without the use of wick drains and settlement periods required would be in accordance with Table 8.	Refer to Addendum 1. Installing the wick drains is a project requirement.	**31**

No.	Question	Response	Addendum 1 Item Number
29	Item 22 of the bid items is for the Preparation of a Storm Water Pollution Plan. In appendix E of book 3 of the specifications there is a Storm Water Pollution Prevention Plan already that has been signed by the QSD and LRP. Since there is already a SWPPP prepared why is there a bid item for another SWPPP?	The City has prepared a draft SWPPP for your use. You are responsible for accepting and implementing the approved SWPPP, or modifying the SWPPP, obtaining approval of the permitting agency, and implementing your revised SWPPP. In any event you are required to take ownership of the draft SWPPP prepared, a modification of the draft SWPPP, or you can prepare your own SWPPP.	**N/A**
30	Does the City have a plan holders list for this project?	No.	**N/A**
31	Can the bid date for this project be extended 3 weeks due to the size and complexity of this project and short bidding period?	No, the bid period cannot be extended.	**N/A**
32	Section 19-6.03D of the Standard Specifications states that the contractor cannot "drill holes of CIP piles" under after the abutment settlement period is over. Is it the City's intention for the contractor to not be able to stat the CIDH for the temporary bridge until after the temporary approaches (temp retaining walls and corresponding settlement period) are completed? Likewise, is the contractor prohibited from starting the permanent CIDH until after the various MSE walls and associated settlement is complete? Or can the contractor work on the CIDHs, abutments, and bridges as the approach fills are being constructed?	Yes, the CIDH piles for the temporary bridge cannot be constructed until after the temporary approaches (temp retaining walls and corresponding settlement period) are completed. Yes, the CIDH piles for the permanent bridge cannot be constructed until after the permanent approaches (MSE walls and corresponding settlement period) are completed.	**N/A**
33	Is the earth material excavated for the removal of the existing bridge footings suitable for backfill of the resulting holes? Or must structure backfill be used? Has this material been tested to determine if it is hazardous or not?	The material has not been tested. All material used for backfill must meet backfill requirements as specified.	**N/A**
34	Due to the height and volume of embankment required for the project, it is conceivable that the Z-2 ADL Soils could be buried in the embankment. Please advise if the City would consider allowing the burial of Z-2 ADL Soils in the embankment to reduce construction costs.	As specified in Special Provision Section 14-11.03A(2), Type Z-2 materials must be transported to and disposed of at a California Class I disposal site. However, you may test the materials for ADL concentration to determine if it is suitable to be used on the project site.	**N/A**
35	In reference to Plan SC-23 & SC-24, the Temporary Construction Easement Line is disconnected east of the temporary bridge and south of the detour road. Please provide a continuous TCE line from Plan SC-23 to Plan SC-24 at this location.	The line is not disconnected. It continues southwest along the UPRR R/W line and off of the sheet. Please see Plan Sheet SCD-2 which shows more of an overall view of the limits of the TCE lines in that area.	**N/A**

No.	Question	Response	Addendum 1 Item Number
36	Railroad Flagging is based on 8 hr. days @ 1300/day. Please clarify the following: a. Typically RR Flaggers get paid portal to portal, if the contractor is working 8 hrs. of actual work, how does the OT get paid? b. If the contractor works a day shift and a night shift (e.g. Thursday Day and Thursday Night); how does RR Flagging get paid? c. If the contractor works on weekend (e.g. Saturday Day and Saturday Night); how does RR Flagging get paid? d. Please confirm that UPRR will not require a full time RR Flagger for the duration of the project until substantial completion.	Refer to the response for Question # 17.	**N/A**
37	Please confirm that the 250 days in the Bid Item #2 are for contractors work operations only. PG&E and other agencies will not impact this allowance.	Refer to Addendum 1. The 250 days is only for the contractors work.	**25**
38	Bid Item #4 Ballast Tamping calls for 2 EA. The contract documents state: " The estimated cost for UPRR to bring in a ballast tamping machine and correct the track elevation is $10,000 per occurrence. For bidding purposes, you must assume a total of two track corrections/ballast tamping. The cost of the first two ballast tamping's must be borne by you and is included in the unit bid price." It appears that this is an allowance item and that the unit price should be set at 10,000 each with an extension of $20,000.00 in the bid schedule.	Refer to Addendum 1.	**18**
39	Please confirm that the Track Settlement Monitoring Bid Item #3 will only be for the Contractors work. PG&E and any other agencies will perform their own Track Monitoring.	Yes, the track settlement monitoring is only for the contractors work.	**N/A**
40	Given the quick turnaround to get project started the Field Office would be due around the NTP date. Please consider removing the Liquidated Damages associated with setting the Field Office or allow for a longer duration.	The office needs to be up and running as soon as possible..	**N/A**
41	Please clarify how Drainage Wicks will be installed in the zone where SD System #4 (60" RCP - ee & u) bisects the MSE Wall.	Refer to Addendum 1.	**6**
42	Please consider revising the noise restrictions (Do not exceed 86dBA Lmax @ 50') given the amount and type of night work that will be required on this project.	Refer to Addendum 1.	**29**

No.	Question	Response	Addendum 1 Item Number
43	Contractor and Subcontractors and Suppliers need a Plan Holders list in order to prepare the Bid. Please consider adding this service to the City of Tracy Website.	There is no planholders list available.	**N/A**
44	Does the City of Tracy or County of San Joaquin have any GROSS RECEIPTS taxes that have to be paid by the Contractor?	No. There are no gross receipt taxes that the City is aware of.	**N/A**
45	Per Caltrans Standard Specs. (2010), Section 51-1.03C(2)(c), PERMANENT STEEL DECK FORMS, this may be used to support the deck slab. Please confirm.	As shown on sheet S-17, permanent steel deck forms are allowed. For loading limits, see "General Notes" on "General Notes" sheet S-4.	**N/A**
46	Per Appendix B, page 2/7, of the UPRR NEW PUBLIC HIGHWAY OVERPASS CROSSING AGREEMENT, Article 2, GRANT OF HIGHWAY GRANT, are the right of easement Costs of $139,629, and $242,758 picked up by the City of Tracy or the Contractor?	The cost for the easements from UPRR has been paid by the City.	**N/A**
47	Referring to Special Provision (2/3) Section 14.11.11 (pg SP-65), where is the Asbestos Containing Material located?	It is unknown if there is any asbestos containing material onsite. Per state law, prior to bridge demolition you are required to test the existing bridge concrete to determine if ADL is present.	**N/A**
48	Will there be a location on the City Web site, where we can look at the planholders list?	There is no planholders list available.	**N/A**
49	Will a list of all Bidder's Inquiries be published, and issued before the bid date?	Yes, all questions that are sent to Zabih Zaca (zabih.zaca@ci.tracy.ca.us) in writing by 5 pm on February 18, 2015 will be answered and posted to the City website.	**N/A**
50	How much retention does the City hold, and for how long?	5% - refer to Addendum 1.	**27**
51	Can the existing bridge demo still be done at night, with the 86 dBa at 50 ft., noise limit?	Refer to Addendum 1.	**29**
52	We are assuming the Plant Establishment period of 90 days, is in addition to the 540 Working Day Contract period. Please confirm.	Correct.	**N/A**
53	The 250 shift period for allocated UPRR flagging costs, paid by the contractor, is this for the Contractor work only?	Refer to Addendum 1. Yes, this is for Contractor work only.	**25**
54	On sheet R-2 (158 of 260), note 1 calls out AASHTO LRFD Bridge Specifications, fourth edition 2007 & 2008 interims and Caltrans amendments. Per AASHTO 2007, section 11.10.1, the last paragraph, refers FHWA-NHI-00-043 for walls with complex geometry, which would be the tiered walls. The NHI document follows AASHTO 2002 ASD design standards. Are we to follow AASHTO 2002 for the complex geometry cases?	No, the complex design must follow LRFD as outlined in Section 11 of AASHTO LRFD Bridge Specifications, fourth edition 2007 & 2008 interims with Caltrans amendments and FHWA-NHI-10-024 dated November, 2009.	**N/A**
55	Please provide specifications and details for Bid Item 194 – Pedestrian Railing (Detour) and Bid Item 195 – Protective Railing (Detour).	Refer to Addendum 1. No additional details will be provided since the design is the responsibility of the contractor.	**37**
56	Does the City of Tracy or County of San Joaquin have any special business tax or gross receipts taxes that have to be paid by the Contractor?	No. There are no special business taxes or gross receipt taxes that the City is aware of.	**N/A**

No.	Question	Response	Addendum 1 Item Number
57	Page I-9 refers to retention to be withheld from the contractor on this project. Please confirm this is correct. If so, at what percentage will retention be withheld?	See response to Question 50.	**27**
58	Is there a plan holders list available for this project?	There is no planholders list available.	**N/A**
59	We have downloaded the Revised Info Handout Item "A" and the new Info Handout Item "H" posted on the City website. However, there was no addenda issued for this revised or additional project information. Are the contractors to acknowledge these revised and added contract documents? Please clarify.	Refer to Addendum 1.	**14 and 17**
60	Page P-21, Non Collusion Affidavit. The Jurat wording on this page is no longer valid for a notary in the State of California effective January 1, 2015. It is our intent to strike out the Jurat wording and attach a separate current Jurat for this bid form unless the City intends to update the form and provide to the bidder's for execution. Please clarify.	Refer to Addendum 1.	**19**
61	The Subcontractor Listing page P-19 provided by the City is asking for the bidders to provide the DUNS# for listed subcontractors at bid time. This is not a Public Contract Code requirement. Is it the intent of the City that we provide the new DIR#'s for listed subcontractors. Senate Bill 854 becomes effective on March 1st in the State of California. Please clarify. See notice below for SB 854 from the California Department of Industrial Relations website. NOTICE NOT ATTACHED TO THIS BIDDER QUESTION AND ANSWER DOCUMENT.	Refer to Addendum 1	**20**
62	Please refer to Plan Sheet S-42. Will the installation of the 42" CIDH Concrete Piling for the detour bridge also require full length temporary casings using the rotated or oscillated method?	Yes, installation of the 42" CIDH piling for the detour bridge also requires full length temporary casings using the rotated or oscillated method per Special Provisions section 49-1.03.	**N/A**
63	In regards to the porcelain panels, please see attached size drawing that was provided from our supplier. Please confirm that this will be the size of the panels. I will also need installation instructions that are not provided in the specs. DRAWING FROM SUPPLIER NOT ATTACHED TO THIS BIDDER QUESTION AND ANSWER DOCUMENT.	Refer to Section 96-1.01C(4) of the Special Provisions.	**N/A**
64	Please provide the sizes for the Roadside Signs as there are no sizes on the Quantity Sheet.	Refer to Addendum 1.	**13**
65	We will need installing instructions for the Bronze Plaque.	Refer to Addendum 1.	**8**
66	Please refer to the project's Technical Special Provisions Sheet SP-22, Section 5-1.20C Railroad Relations. Will the contractor be subject to the same restrictions if the train cars are sitting on the tracks and/or moving back and forth through the work areas as they are for "through" trains (i.e. temporarily postpone operations while train passes)?	Yes. However, UPRR has indicated that they will coordinate activities for the train cars sitting on the tracks with the contractors operations.	**N/A**
67	After reviewing the plans and specifications through eBidBoard, we can't find any specifications for Item #24 Temporary Hydroseed and for Item #98 Erosion Control (Hydroseed) to provide a quote on these items.	Refer to Addendum 1.	**33**

No.	Question	Response	Addendum 1 Item Number
68	We would like to submit a quote to the General Contractors on the concrete painting/staining for the MSE walls and/or retaining walls on the above referenced project. The plans show a substantial square footage of Architectural Treatment at retaining walls and MSE walls. However, I cannot find any stain specs. The form liner pattern is calling out "Ashlar Stone" pattern. Do these walls get stain? What is the spec?	None of the MSE wall panels are stained. As shown on the MSE Wall details sheets, there are smooth finish wall panels that consist of integrally colored concrete.	**N/A**
69	We have been informed by the pre-qualified MSE suppliers that there is conflict in the specifications with regard to AASHTO or Caltrans specification for the MSE backfill that could significantly affect the constructability and cost for the project. Please clarify whether the AASHTO or Caltrans specification for MSE backfill will apply (see attached).	Refer to Addendum 1. The MSE walls shown in the plans, which are for bidding purposes only, were designed using the AASHTO backfill requirements and corresponding AASHTO corrosion rates. The specs have been revised to allow the contractor the option to use either the AASHTO backfill requirements and corresponding AASHTO corrosion rates or the Caltrans backfill requirements and corresponding Caltrans corrosion rates. The soil reinforcement designed by the contactor must account for whichever backfill requirement and corresponding corrosion rate is chosen to be used.	**35/36**